SUBMITTAL DATA

MUL24HP230V1R32AO
24000 BTU/H Multi-Zone Heat Pump System

Job Name	Location	Date
Purchaser	Engineer	
Submmited to	For	
Unit Designation	Schedule No.	

MUL24HP230V1R32AO

GENERAL FEATURES

- AHRI Certificate: 215218914 (Non-Ducted)
  215218919 (Ducted)
  215218924 (Mixed)
- High Efficiency DC Inverter Technology
- Compact and Quiet Design
- Auto Restart on Power Outages
- Multi-point Diagnostics
- Wi-Fi Included (Factory Installed)
- Low Ambient Cooling down to -22˚F (Range -22˚F to 118˚F)
- Low Ambient Heating down to -22˚F (Range -22˚F to 75˚F)
- Coil (Indoor and Outdoor) Copper Tube / Aluminum Fin
- Blue Colored Fin - 500 Hrs Salt Spray Tested

WALL MOUNT OPTIONS

	MULTI-ZONE					
	MUL18HP230V1R32AO	MUL24HP230V1R32AO	MUL30HP230V1R32AO	MUL36HP230V1R32AO	MUL42HP230V1R32AO	MUL48HP230V1R32AO
LIVO						
System Model no.						
LIV05HP230V1R32AH	•	•	•	•	•	•
LIV07HP230V1R32AH	•	•	•	•	•	•
LIV09HP230V1R32AH	•	•	•	•	•	•
LIV12HP230V1R32AH	•	•	•	•	•	•
LIV18HP230V1R32AH		•	•	•	•	•
LIV24HP230V1R32AH			•	•	•	•
LIV30HP230V1R32AH						
LIV36HP230V1R32AH						
VIREO						
System Model no.						
VIR09HP230V1R32AH	•	•	•	•	•	•
VIR12HP230V1R32AH	•	•	•	•	•	•
VIR18HP230V1R32AH		•	•	•	•	•
VIR24HP230V1R32AH			•	•	•	•
ENVO						
System Model no.						
ENV09HP230V1R32AH	•	•	•	•	•	•
ENV12HP230V1R32AH	•	•	•	•	•	•
ENV18HP230V1R32AH		•	•	•	•	•
ENV24HP230V1R32AH			•	•	•	•
SAPPHIRE						
System Model no.						
SAP09HP230V1R32AH	•	•	•	•	•	•
SAP12HP230V1R32AH	•	•	•	•	•	•
SAP18HP230V1R32AH		•	•	•	•	•
SAP24HP230V1R32AH			•	•	•	•

ADDITIONAL INDOOR UNIT OPTIONS

	MULTI-ZONE					
	MUL18HP230V1R32AO	MUL24HP230V1R32AO	MUL30HP230V1R32AO	MUL36HP230V1R32AO	MUL42HP230V1R32AO	MUL48HP230V1R32AO
ONE WAY CASSETTE						
System Model no.						
OWC09HP230V1R32AH	•	•	•	•	•	•
OWC12HP230V1R32AH	•	•	•	•	•	•
OWC18HP230V1R32AH		•	•	•	•	•
OWC20HP230V1R32AH			•	•	•	•
CEILING CASSETTE						
System Model no.						
CAS09HP230V1R32AH	•	•	•	•	•	•
CAS12HP230V1R32AH	•	•	•	•	•	•
CAS18HP230V1R32AH		•	•	•	•	•
CAS24HP230V1R32AH			•	•	•	•
SLIM DUCT						
System Model no.						
DUC09HP230V1R32AH	•	•	•	•	•	•
DUC12HP230V1R32AH	•	•	•	•	•	•
DUC18HP230V1R32AH		•	•	•	•	•
DUC24HP230V1R32AH			•	•	•	•
FLOOR/CEILING						
System Model no.						
FLR09HP230V1R32AH	•	•	•	•	•	•
FLR12HP230V1R32AH	•	•	•	•	•	•
FLR18HP230V1R32AH		•	•	•	•	•
FLR24HP230V1R32AH			•	•	•	•
MINI-CONSOLE						
CON09HP230V1R32AH	•	•	•	•	•	•
CON12HP230V1R32AH	•	•	•	•	•	•
CON18HP230V1R32AH		•	•	•	•	•

NOTE: R32 Indoor units are only compatible with R32 Outdoor units. Keep in mind, line set is always sized by the indoor unit valve diameter.

SPECIFICATIONS, FEATURES & FUNCTION SUMMARY

SYSTEM TYPE			HEAT PUMP
Outdoor Model			MUL24HP230V1R32AO
Number of Zones			2 - 3
SYSTEM PERFORMANCE (Non-Ducted Indoor Units)			
Cooling Capacity	Min - Max	Btu/h	6,292 - 28,772
	Capacity @95°F	Btu/h	24,000
Heating Capacity	Min - Max	Btu/h	8,704 - 26,400
	Capacity @47°F	Btu/h	24,000
	Capacity @17°F	Btu/h	23,600
	Capacity Max @5°F	Btu/h	21,600
SEER2			21
EER2			13.3
HSPF2			10.0
COP @5°F			2.0
SYSTEM PERFORMANCE (Ducted Indoor Units)			
Cooling Capacity	Min - Max	Btu/h	6,292 - 28,772
	Capacity @95°F	Btu/h	24,000
Heating Capacity	Min - Max	Btu/h	8,704 - 26,400
	Capacity @47°F	Btu/h	24,000
	Capacity @17°F	Btu/h	22,000
	Capacity Max @5°F	Btu/h	21,600
SEER2			18.0
EER2			12.0
HSPF2			8.1
COP @5°F			1.86
SYSTEM PERFORMANCE (Mixed Ducted and Non-Ducted Indoor Units)			
Cooling Capacity	Min - Max	Btu/h	6,292 - 28,772
	Capacity @95°F	Btu/h	24,000
Heating Capacity	Min - Max	Btu/h	8,704 - 26,400
	Capacity @47°F	Btu/h	24,000
	Capacity @17°F	Btu/h	23,000
	Capacity Max @5°F	Btu/h	21,600
SEER2			19.0
EER2			12.2
HSPF2			9.0
COP @5°F			1.80
OUTDOOR UNIT			**MUL24HP230V1R32AO**
Cooling Temperature Range		°F	-22 - 118
Heating Temperature Range		°F	-22 - 75
Refrigerant Type			R32
Cmpressor Type			GREE G-20 / Double Cylinder / 1 - STAGE INVERTER
Sound Pressure Level		dB(A)	58
External Dimensions (W x H x D)		in	37-61/64 × 25-63/64 × 15-53/64
Package Dimension (W x H x D)		in	40-5/8 × 29-1/64 × 17-61/64
Net Weight		lbs	112.5
Gross Weight		lbs	122.4
REFRIGERANT PIPING			
Refrigerant Charge - R32		oz	59.98
Cmpressor Type			GREE G-20 / Double Cylinder / 1 - STAGE INVERTER
Additional Charge		oz/ft	0.2
Port Size (Liquid - Gas)		Port A (in)	1/4 - 3/8
		Port B (in)	1/4 - 3/8
		Port C (in)	1/4 - 3/8
		Port D (in)	
		Port E (in)	
Pre-Charge Length		ft	98
Pipe Length (Min - Max)		ft	10 - 197
Pipe Length to furthest Indoor Unit		ft	66
Max. Pipe Elevation		ft	49

ELECTRICAL		
Power Supply		208-230V / 1Ph / 60Hz
Voltage Range (Min - Max)	VAC	187 - 253
Rated Current - Cooling	A	14
Rated Current - Heating	A	14.8
MCA	A	19.5
MOCP	A	25
Suggested Breaker Size	A	20
Main Power Wire Size	AWG	Per Local Code
Interconnecting Wire Size	AWG	14 / 4
FEATURES & FUNCTIONS SUMMARY		
Inverter Type		G20
Ultra Low Frequency Torque Control		Yes
Compressor Type - Inverter		Yes
Basepan With Electric Heater		High Efficiency Rotary
Indoor & Outdoor Fin Coating (Blue Fin)		Yes
Intelligent Defrosting		Yes
Intelligent Preheating		Yes
Low Voltage Startup		Yes
Memory/Power Failure Recovery		Yes
Self Diagnosis		Yes

ALLOWABLE COMBINATIONS CAPACITIES

MODEL NUMBER	POSSIBLE COMBINATIONS*	COOLING CAPACITY (Btu/h)					HEATING CAPACITY (Btu/h)				
		ZONE1	ZONE2	ZONE3	ZONE4	ZONE5	ZONE1	ZONE2	ZONE3	ZONE4	ZONE5
MUL24HP230V1R32AO	5K+7K	5,000	7,000				6,000	8,000			
MUL24HP230V1R32AO	7K+7K	7,000	7,000				8,000	8,000			
MUL24HP230V1R32AO	5K+5K+5K	5,000	5,000	5,000			6,000	6,000	6,000		
MUL24HP230V1R32AO	7K+7K+7K	7,000	7,000	7,000			8,000	8,000	8,000		
MUL24HP230V1R32AO	5K+5K+7K	5,000	5,000	6,000			6,000	6,000	8,000		
MUL24HP230V1R32AO	5K+7K+7K	5,000	7,000	7,000			6,000	8,000	8,000		
MUL24HP230V1R32AO	9K+9K	9,000	9,000				9,000	9,000			
MUL24HP230V1R32AO	9K+12K	9,000	12,000				9,000	12,000			
MUL24HP230V1R32AO	9K+18K	8,000	16,000				8,000	16,000			
MUL24HP230V1R32AO	12K+12K	12,000	12,000				12,000	12,000			
MUL24HP230V1R32AO	12K+18K	9,600	14,400				9,600	14,400			
MUL24HP230V1R32AO	18K+18K	12,000	12,000				12,000	12,000			
MUL24HP230V1R32AO	9K+9K+9K	8,000	8,000	8,000			8,000	8,000	8,000		
MUL24HP230V1R32AO	9K+9K+12K	7,200	7,200	9,600			7,200	7,200	9,600		
MUL24HP230V1R32AO	9K+9K+18K	6,000	6,000	12,000			6,000	6,000	12,000		
MUL24HP230V1R32AO	9K+12K+12K	6,545	8,727	8,727			6,545	8,727	8,727		
MUL24HP230V1R32AO	12K+12K+12K	8,000	8,000	8,000			8,000	8,000	8,000		

Outdoor Unit & Possible Indoor Unit Combinations with AHRI Certified Performance

*You may substitute the 9K unit with a 5K or 7K High Wall unit, find complete capacity information in the extended ratings chart.

DIMENSIONS

OUTDOOR UNIT

Unit: inch

MUL24HP230V1R32AO
DIMENSIONS

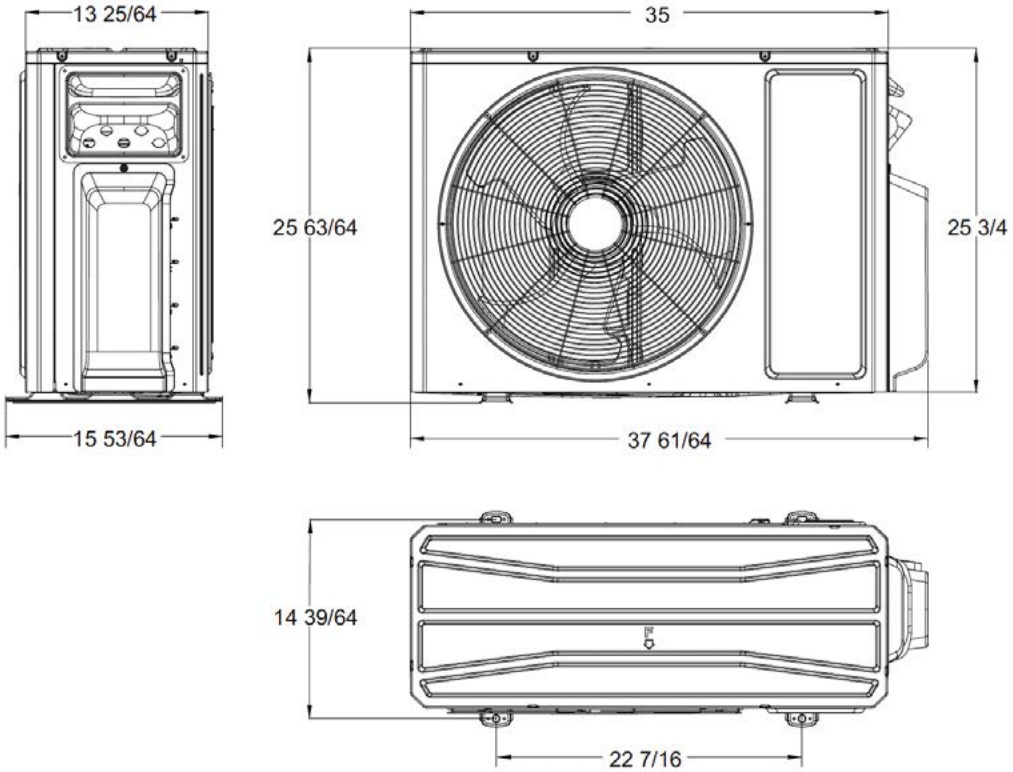

CLEARANCES

OUTDOOR UNIT

Minimum clearence

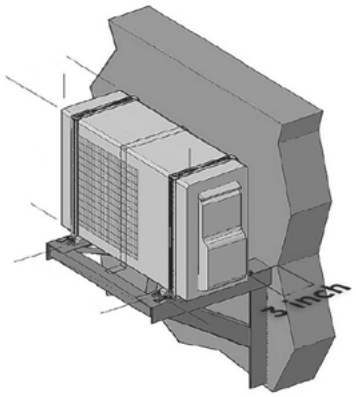

NOTE:
If bottom of the unit is free of airflow obstructions similar to the mounting bracket figure, the clearance to the wall on the back can be reduced to 3 inches.

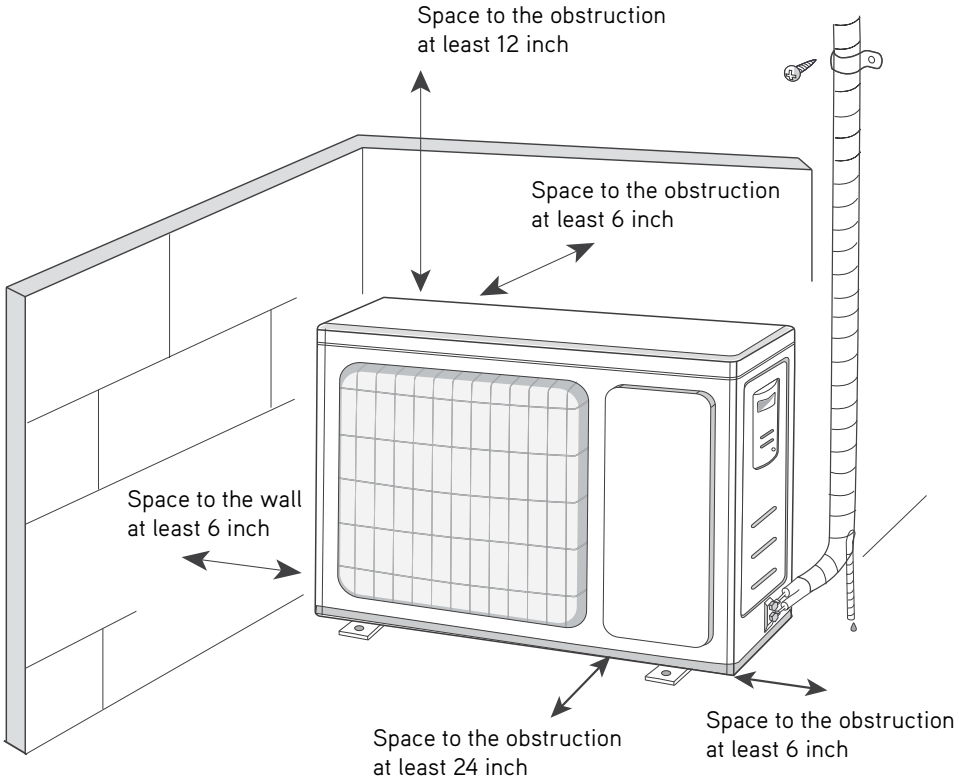

Specifications are subject to change without notice. Manufacturer reserves the right to discontinue or modify specifications or designs without notice or without incurring obligations. All Rights reserved.