Triangle Tube

Installation & Maintenance Manual

prestige

SOLO 80, 110, 155, 175, 250, 299 & 399

NOTICE

- *Customer must register unit within thirty (30) days of installation in order to gain warranty coverage. See Warranty Card for details.*
- *When receiving the PRESTIGE Solo unit, any claims for damage or shortage in shipment must be filed immediately against the transportation company by the consignee.*
- *Leave all documentation received with appliance with the owner for future reference.*

⚠ WARNING

If the information in this manual is not followed exactly, a fire or explosion may result causing substantial property damage, serious injury, or death.

FOR YOUR SAFETY

- Do not store or use gasoline or other flammable vapors and liquids in the vicinity of this or any other appliance.
- **WHAT TO DO IF YOU SMELL GAS**
  - Do not try to light any appliance
  - Do not touch any electrical switch; do not use any phone in your building.
  - Immediately call your gas supplier from a neighbor's phone. Follow the gas supplier's instructions.
  - If you cannot reach your gas supplier, call the fire department.

Installation and service must be performed by a qualified installer, service agency or the gas supplier.

A1007885-664A0700 ■ D - Aug. 2020
2019-06

THE ORIGINAL INNOVATORS

INTENTIONALLY LEFT BLANK

TABLE OF CONTENTS

PRODUCT AND SAFETY INFORMATION XI

CHAPTER 1 - PRE-INSTALLATION REQUIREMENTS 1

1.1. Code Compliance 1
1.2. Determining Product Location 1
1.3. Boiler Freeze Protection Feature 2
1.4. Boiler Replacement 2
1.5. Recommended Clearances 2
1.6. Residential Garage Installations 2

CHAPTER 2 - COMBUSTION AIR & VENTING 3

2.1. Combustion Air Contamination 3
2.2. Ventilation and Combustion Air Requirements - Direct Vent 4
2.3. Ventilation and Combustion Air Requirements - Category IV 4
2.4. Methods of Accessing Combustion Air Into A Space - Category IV 5
2.4.1. Indoor Combustion Air 5
2.4.2. Outdoor Combustion Air 5
2.4.3 Combination of Indoor and Outdoor Combustion Air 6
2.5. Combustion Air and Vent Piping 6
2.6. Removal of an Existing Boiler from a Common Vent System 7
2.7. Carbon Monoxide Detector Installation 8
2.8. Commonwealth of Massachusetts Installation Requirements 8
2.8.1 Installation of Carbon Monoxide Detectors. 8
2.8.2 Approved Carbon Monoxide Detectors. 8
2.8.3 Signage 8
2.8.4 Inspection. 8
2.8.5 Manufacturer Requirements - Gas Equipment Venting System Provided. 9
2.8.6 Manufacturer Requirements - Gas Equipment Venting System Not Provided. 9

CHAPTER 3 - UNIT PREPARATIONS 11

3.1. Handling Instructions 11
3.2. Wall Mounting Installation 11
3.3. Wall Mounting Guidelines 11
3.4. Stud Walls - Installation 12
3.4.1 PRESTIGE Solo 80/110/155/175/250 12
3.4.2 PRESTIGE Solo 299/399 12
3.5. Wall Bracket Installation - Solid Walls 12
3.6. Boiler Mounting 12

CHAPTER 4 - BOILER PIPING 13

4.1. General Piping Requirements 13
4.2. Pressure Relief Valve 13
4.3. Boiler Air Vent 14
4.4. Low Water Cutoff Device 14
4.5. Additional Limit Control 15
4.6. Backflow Preventer 15
4.7. Boiler System Piping Applications 15
4.8. Expansion Tank and Makeup Water 16
4.8.1 Diaphragm Expansion Tank 16
4.8.2 Closed-Type Expansion Tank 16
4.9. Circulator 17
4.10. Sizing Primary Piping 17
4.11. Domestic Hot Water System Piping 17
4.12. System Piping - Zone Circulators 17
4.13. System Piping - Zone Valves 17
4.14. System Piping - Through Boiler 17
4.15. System Piping - Radiant Heating 23
4.16. System Piping - Special Application 23
4.17. System Piping - Multiple Units Installation 23

CHAPTER 5 - INSTALLING VENT/COMBUSTION AIR & CONDENSATE DRAIN 25

5.1. Installing Vent and Combustion Air 25
5.2. Installing Condensate Drain Assembly 25

CHAPTER 6 - GAS PIPING 27

6.1. Gas Supply Piping Connection 27
6.2. Natural Gas 28
6.2.1 Pipe Sizing 28
6.2.2 Supply Pressure Requirements 28
6.3. Propane Gas 29
6.3.1 Pipe Sizing 29
6.3.2 Supply Pressure Requirements 29

CHAPTER 7 - INTERNAL WIRING 33

7.1. General Requirements 33
7.2. Fuse Locations 33

CHAPTER 8 - EXTERNAL WIRING 35

8.1. General Requirements 35
8.2. Line Voltage Connections 35
8.3. Circulator Wiring 35
8.4. Flame Status & Alarm Wiring 35
8.5. Low Voltage Connections 36
8.6. Thermostat Wiring 36
8.7. Outdoor Sensor Wiring 37
8.8. Domestic Hot Water Wiring 37
8.9. Additional Boiler Limits 37
8.10. External Modulation Control 37
8.11. System Sensor Wiring 37
8.12. Cascade Wiring 38
8.13. Modbus Wiring 38

CHAPTER 9 - CTRLMAX OPERATION 41

9.1. CTRLMax Navigation 41
9.2. CTRLMax Menu Structure 42
9.3. Home Screen 43
9.4. Status Line Messages 44
9.5. Main Menu 45
9.6. EZ Setup 45
9.7. Heating EZ Setup 46
9.7.1 Select CH Demand (No outdoor sensor connected) 46
9.7.2 Select CH Demand (Outdoor sensor connected) 47
9.8. Domestic Hot Water EZ Setup 48
9.9. EZ Setup Reset 49
9.10. Display EZ Setup 49
9.11. CH/DHW Operation 50
9.12. Boiler Information 50
9.12.1 Information Items 51
9.12.2 Lockout Screen 52
9.12.3 Manual Reset Lockouts 53
9.12.4 Automatic Reset Blocking Lockouts 54

CHAPTER 10 - START-UP PREPARATION 55

10.1. Boiler System Fluid Requirements 55
10.1.1 Boiler Fluid pH Level 6.0 to 8.0 55
10.1.2 Boiler Fluid Hardness Less Than 7 Grains 55
10.1.3 Chlorinated Water 55
10.1.4 Flush Boiler to Remove Sediment 55
10.1.5 Cleaning of Old Boiler/System: 55
10.1.6 Cleaning of New Boiler/System: 55
10.1.7 Check and Test Antifreeze 56
10.1.8 Use of Antifreeze in the Boiler System 56
10.2. Filling the Boiler System 56
10.3. Check Low Water Cut-Off Device 56
10.4. Check For Gas Leaks 57
10.5. Check Thermostat Circuit 57
10.6. Inspect Condensate Drain Assembly 57

CHAPTER 11 - START-UP PROCEDURES 59

11.1. Final Checks Before Start-Up 59
11.2. PRESTIGE Solo Start-Up 59
11.3. Check the PRESTIGE Solo and System 59
11.3.1 Check Boiler Piping. 59
11.3.2 Check Vent and Combustion Air Piping 59
11.3.3 Verify Carbon Monoxide Detector 59
11.3.4 Check Gas Piping 60
11.3.5 Verify Flame Pattern and Combustion 60
11.3.6 Measure Input - Natural Gas Only 61
11.3.7 Test High Temperature Limit 61

CHAPTER 12 - OUTDOOR RESET CONTROL 63

12.1. Mounting the Outdoor Sensor 63
12.2. Wiring the Sensor 63

CHAPTER 13 - EXTERNAL MODULATING CONTROL 65

13.1. Wiring the Modulating Controller 65
13.2. CTRLMax Programming 65
13.3. Programming of External Modulating Control 65

CHAPTER 14 - CHECK-OUT PROCEDURES 67

CHAPTER 15 - INSTALLATION RECORD 69

CHAPTER 16 - MAINTENANCE SCHEDULES 71

16.1. Service Technician 71
16.2. Owner Maintenance 71

CHAPTER 17 - MAINTENANCE PROCEDURES 73

17.1. Service Technician Maintenance Procedures 73
17.2. Reported Problems 73
17.3. Check Surrounding Area 73
17.4. Inspect Burner Area 73
17.5. Check System Piping 73
17.6. Clean Condensate Drain Assembly 73
17.7. Check Ventilation Air Openings 74
17.8. Inspect Vent and Combustion Air Piping 74
17.9. Check Boiler System 74
17.10. Check Expansion Tank 74
17.11. Check Boiler Relief Valve 74
17.12. Inspection of Ignitor 74
17.13. Check Ignition Cable and Ground Wiring 75
17.14. Check Control Wiring 75
17.15. Check Control Settings 75
17.16. Perform Start-up and Checkout Procedures 75
17.17. Check Burner Flame 75
17.18. Check Flame Signal 75
17.19. Check Combustion Levels 76
17.20. Check Flue Gas Temperature 76
17.21. Clean Heat Exchanger 76
17.22. Check Carbon Monoxide Detectors 76
17.23. Review With Owner 76
17.24. Torque Specifications Table 76

CHAPTER 18 - REPLACEMENT PARTS 77

CHAPTER 19 - PRODUCT SPECIFICATIONS 87

INDEX OF ILLUSTRATIONS AND TABLES

Fig. 1 - All Combustion Air from adjacent Indoor Spaces through Indoor Combustion Openings 5
Fig. 2 - All Combustion Air from Outdoors Through One Permanent Air Opening 5
Fig. 3 - All Combustion Air from Outdoors Through Ventilated Attic 6
Fig. 4 - All Combustion Air from Outdoors Through Horizontal Ducts.....6
Fig. 5 - Pressure Relief Valve and Boiler Drain Valve Installation 13
Fig. 6 - Piping Component Legend 14
Fig. 7 - Near Boiler Piping - Diaphragm Expansion Tank 15
Fig. 8 - Near Boiler Piping - Closed Type Expansion Tank 16
Fig. 9 - System Piping - Zoning with Zone Circulators 18
Fig. 10 - System Piping - Zoning with Zone Valves 19
Fig. 11 - System Piping - Multiple Zone Valve with Single System/Boiler Circulator 20
Fig. 12 - System Piping - Single Zone System with Single System/Boiler Circulator 21
Fig. 13 - Multiple PRESTIGE Solo Boiler Piping - Primary / Secondary 22
Fig. 14 - Condensate Drain Assembly..... 26
Fig. 15 - Recommended Gas Supply Piping 27
Fig. 16 - Gas Valve / Venturi Assembly - PRESTIGE Solo 80-110 30
Fig. 17 - Gas Valve / Venturi Assembly - PRESTIGE Solo 155/175/250 30
Fig. 18 - Gas Valve / Venturi Assembly - PRESTIGE Solo 299/399 31
Fig. 19 - CTRLMax Control Module Fuse Location 33
Fig. 20 - Prestige Solo Boiler Factory Wiring 34
Fig. 21 - Terminal Strip Location 35
Fig. 22 - Low Voltage Connections 36
Fig. 23 - Typical Zone Panel Wiring to PRESTIGE with Zone Valves 38
Fig. 24 - Typical Zone Panel Wiring to PRESTIGE with Zone Circulators..... 39
Fig. 25 - CTRLMax User Interface 41
Fig. 26 - PRESTIGE Solo 80/110 Jacket Components.....77
Fig. 27 - PRESTIGE Solo 155/175/250 Jacket Components.....78
Fig. 28 - PRESTIGE Solo 299/399 Jacket Components..... 79
Fig. 29 - PRESTIGE Solo 80/110 Internal Components.....80
Fig. 30 - PRESTIGE Solo 155/175/250 Internal Components.....81
Fig. 31 - PRESTIGE Solo 299/399 Internal Components 82
Fig. 32 - PRESTIGE Solo 80/110 Burner Components 83
Fig. 33 - PRESTIGE Solo 155/175/250 Burner Components..... 84
Fig. 34 - PRESTIGE Solo 299/399 Burner Components 85
Fig. 35 - PRESTIGE Solo Control & Display Enclosures 86
Fig. 36 - Front View PRESTIGE Solo 80/110 88
Fig. 37 - Right Side View PRESTIGE Solo 80/110 89

INDEX OF ILLUSTRATIONS AND TABLES

Fig. 38 - Front View PRESTIGE Solo 155/175/250 90
Fig. 39 - Right Side View PRESTIGE Solo 155/175/250 91
Fig. 40 - Front View PRESTIGE Solo 299/399 92
Fig. 41 - Right Side View PRESTIGE Solo 299/399 93

Graph 1 - Pressure Loss Through Boiler - Taco Circulators 94
Graph 2 - Pressure Loss Through Boiler - Grundfos Circulators 94
Graph 3 - Pressure Loss Through Boiler - Taco Circulators 95
Graph 4 - Pressure Loss Through Boiler - Grundfos Circulators 95
Graph 5 - Pressure Loss Through Boiler - Taco Circulators 96
Graph 6 - Pressure Loss Through Boiler - Grundfos Circulators 96

Table 1 - Gas Piping Sizing - Natural Gas 28
Table 2 - Outdoor Reset Preset Selections 47
Table 3 - Throttle Screw Adjustment 61
Table 4 - Acceptable Combustion Levels 61

INTENTIONALLY LEFT BLANK

PRODUCT AND SAFETY INFORMATION

IMPORTANT SAFETY INFORMATION FOR THE HOMEOWNER AND THE INSTALLER

This manual contains important information with respect to the installation, starting up and maintenance of the appliance.

This manual must be provided to the Homeowner, who will keep it in a safe place for future reference.

Triangle Tube accepts no liability for any damage, injury, or loss of life resulting from incorrect installation, alteration of any factory supplied parts, or the use of parts or fittings not specified by Triangle Tube. If there is a conflict or doubt about the proper installation of the unit or any factory supplied replacement parts please contact Triangle Tube Technical Support.

DEFINITIONS

The following terms are used throughout this manual to bring attention to the presence of potential hazards or to important information concerning the product.

⚠ DANGER

Indicates the presence of a hazardous situation which, if ignored, will result in substantial property damage, serious injury, or death.

⚠ WARNING

Indicates a potentially hazardous situation which, if ignored, can result in substantial property damage, serious injury, or death.

CAUTION

Indicates a potentially hazardous situation which, if ignored, can result in minor property damage, or injury.

NOTICE

Indicates special instructions on installation, operation or maintenance, which are important to the equipment but not related to personal injury hazards.

BEST PRACTICE

Indicates recommendations made by Triangle Tube for the installers, which will help to ensure optimum operation and longevity of the equipment.

⚠ DANGER

- **Do not use this appliance if any part has been under water. Immediately call a qualified service technician to inspect the appliance and to replace any part of the control system which has been under water.**
- **Avoid electrical shock when servicing the appliance, by disconnecting the electrical supply prior to performing maintenance.**
- **Failure to comply with these instructions will result in substantial property damage, serious injury, or death.**

⚠ WARNING

- **What to do if you smell gas:**
  - **Do not try to light any appliance**
  - **Do not touch any electrical switch; do not use any phone in your building.**
  - **Immediately call your gas supplier from a neighbor's phone. Follow the gas supplier's instructions.**
  - **If you cannot reach your gas supplier, call the fire department.**
- **Do not store or use gasoline or other flammable vapors and liquids in the vicinity of this or any other appliance.**
- **Prior to installing this product, the qualified installer must read all instructions included in this manual and all accompanying manuals/ documents with this appliance.**
- **All installation steps required in these manuals must be performed in the proper order given.**
- **This product must be maintained / serviced and inspected annually by a qualified service technician.**
- **A byproduct of any gas fired appliance is carbon monoxide. Triangle Tube follows the recommended advice of CPSC and requires the installation of a minimum of two (2) carbon monoxide detectors with an alarm and battery back-up if hard wired; one in the mechanical room where the boiler is located and another installed in the area outside each sleeping area for all installations.**
- **Consult the local authority having jurisdiction for any additional carbon monoxide detector requirements in your area. See** *Section 2.8 on page 8* **for additional carbon monoxide detector requirements in Massachusetts.**
- **Failure to comply with these instructions can result in substantial property damage, serious injury, or death.**

PRODUCT AND SAFETY INFORMATION

⚠ WARNING

- **Should overheating occur or if the gas supply fails to shut off, turn OFF the manual gas control valve external to the appliance.**
- **Do not add cold make up water when the appliance is hot. Thermal shock can potentially cause cracks in the heat exchanger.**
- **Failure to comply with these instructions can result in substantial property damage, serious injury, or death.**

CAUTION

- It is prohibited to carry out any modifications to the appliance without prior written consent from Triangle Tube.
- Faulty parts must only be replaced by genuine Triangle Tube factory parts.
- Failure to comply with these instructions can result in minor property damage, or injury.

NOTICE

- *The homeowner is only permitted to carry out the basic set-up operations (EZ Setup) after he has received all relevant instructions from the installer. Any other set-up must be carried out by a qualified installer.*
- *In case of any anomaly, please call your qualified service technician.*
- *Make sure to reference the unit's model number and serial number from the rating label when inquiring about service or troubleshooting.*
- *Triangle Tube reserves the right to change the technical characteristics, components and features of its products without prior notice. Check for an updated version of this manual at www.triangletube.com.*

1.1. Code Compliance

The PRESTIGE Solo must be installed by a qualified installer in accordance with the following:

- All applicable local, state, national and provincial codes, ordinances, regulations and laws.
- For installations in Massachusetts, code requires the PRESTIGE Solo to be installed by a licensed plumber or gas fitter, and if antifreeze is utilized, the installation of a reduced pressure back-flow preventer device is required in the boiler's cold water fill or make up water supply line.
- For installation in Massachusetts, all direct vented appliances must comply with the guidelines as outlined in *Section 2.8 on page 8*.
- The National Fuel Gas Code (NFPA54/ ANSI Z 223.1).
- National Electric Code (ANSI/NFPA 70).
- For installations in Canada - Installation Code for Gas Burning Equipment (CAN/CSA B149.1), Canadian Electrical Code Part 1 (CSA C22.1).
- Standards for Controls and Safety Devices for Automatically Fired Boilers (ANSI/ASME CSD-1), when required.

NOTICE

The boiler gas manifold and gas controls meet the safe lighting and other performance requirements as specified in ANSI Z21.13.

1.2. Determining Product Location

NOTICE

The PRESTIGE Solo is certified for indoor, conditioned space installations ONLY.

Before locating the PRESTIGE Solo check for convenient locations to:

- Heating system piping
- Venting
- Gas supply piping
- Electrical service

Ensure the PRESTIGE Solo location allows the combustion air/vent piping to be routed directly through the building and terminate properly outside with a minimum amount of length and bends.

Ensure the area chosen for the installation of the PRESTIGE Solo is free of any combustible materials, gasoline, or other flammable liquids.

⚠ WARNING

Failure to remove or maintain the area free of combustible materials, gasoline, or other flammable liquids or vapors can result in substantial property damage, serious injury, or death.

Ensure the PRESTIGE Solo and its controls are protected from dripping or spraying water during normal operation or service.

The PRESTIGE Solo should be installed in a location so that any water leaking from the boiler, piping connections, or relief valve will not cause damage to the surrounding area or any lower floors in the structure.

1.3. Boiler Freeze Protection Feature

The CTRLMax boiler management system has a freeze protection feature built in. This feature monitors the boiler water temperature and responds as follows when no call for heat is present:

- 46ºF [8ºC] Pump outputs configured to respond to a CH1 Call are enabled.
- 42ºF [6ºC] Pump outputs configured to respond to a CH1 or CH2 Call are enabled, Burner operates at low fire.
- 60ºF [15ºC] Freeze protection ends. Burner & all pumps turn off after completing CH Post Pump Time.

CAUTION

- The boiler freeze protection feature is disabled during a hard lockout. The burner will not fire, but the circulators will operate.
- The boiler freeze protection feature is designed to protect the boiler, not the heating system. The boiler should be installed in a primary/secondary piping arrangement if it is installed in an unheated space or exposed to water temperatures of 46ºF or less. Refer to *Chapter 4* for primary/secondary and *Chapter 10* for antifreeze guides.
- Failure to comply can result in minor property damage, or injury.

1.4. Boiler Replacement

If the PRESTIGE Solo is replacing an existing boiler, the following items should be checked and corrected prior to installation:

- Boiler piping leaks and corrosion.
- Proper location and sizing of the expansion tank on the boiler heating loop.
- The existing vent system is appropriate for the PRESTIGE Solo and it is correctly installed. Refer to the PRESTIGE Vent Supplement for the vent system requirements.
- Amount and quality of propylene glycol within the system, if applicable.

1.5. Recommended Clearances

The PRESTIGE Solo is approved for zero clearance to combustibles, excluding vent and boiler piping.

- Boiler piping must be a minimum 1/4 inch from combustible materials.
- Reference the PRESTIGE Vent Supplement for vent pipe clearance requirements.

BEST PRACTICE

It is recommended that the following clearances be maintained for serviceability:

- *Top boiler jacket - 24 inches [610 mm].*
- *Front - 24 inches [610 mm].*
- *Bottom boiler piping - 24 inches [610 mm].*
- *Rear - 0 inches*
- *Sides - 6 inches [153 mm]*

NOTICE

When maintaining less than recommended service clearances, some product labeling, including the rating label, may become hidden and unreadable.

⚠ WARNING

- **If the recommended clearances listed above cannot be maintained or the enclosure in which the boiler is installed is less than 85 cubic feet, the space must be ventilated.** *See Section 2.2 on page 4.*
- **When installing the PRESTIGE Solo in a confined space, sufficient air must be provided to allow, under normal operating conditions, proper air flow around the product to maintain ambient temperatures within safe limits to comply with the National Fuel Gas Code (NFPA 54 / ANSI Z223.1)**
- **Failure to comply with these instructions can result in substantial property damage, serious injury, or death.**

1.6. Residential Garage Installations

When installing the PRESTIGE Solo in a residential garage, the following special precautions per NFPA 54/ ANSI Z223.1 must be taken:

- Mount the unit a minimum 18 inches [458 mm] above the floor level of the garage. Ensure the burner and ignition devices / controls are no less than 18 inches [458 mm] above the floor level.
- Locate or protect the unit in a manner so it cannot be damaged by a moving vehicle.

2.1. Combustion Air Contamination

⚠ WARNING

If the PRESTIGE Solo combustion air inlet is located in an area likely to cause or contain contamination, or if products which could contaminate the air cannot be removed, the combustion air must be repiped and terminated at another location. Contaminated combustion air will damage the unit and its burner system, and can result in substantial property damage, serious injury, or death.

⚠ DANGER

- **Do not operate the PRESTIGE Solo if the combustion air inlet is located near a laundry room or pool facility. These areas will always contain hazardous contaminants.**
- **Pool, laundry, common household, and hobby products often contain fluorine or chlorine compounds. When these chemicals pass through the burner and vent system, they can form strong acids. These acids will corrode the heat exchanger, burner components, and vent system, causing serious damage and possible flue gas spillage or water leakage into the surrounding area.**
- **Please read the information listed below. If contaminating chemicals are located near the area of the combustion air inlet, the installer must pipe the combustion air inlet to an area free of these chemicals, as indicated in** *Chapter 5 on page 25***.**
- **Failure to comply with these instructions will result in substantial property damage, serious injury, or death**

Potential contaminating products

- Spray cans containing chloro/fluorocarbons
- Permanent Wave Solutions
- Chlorinated wax
- Chlorine based swimming pool chemicals / cleaners
- Calcium Chloride used for thawing ice
- Sodium Chloride used for water softening
- Refrigerant leaks
- Paint or varnish removers
- Hydrochloric acid / muriatic acid
- Cements and glues
- Antistatic fabric softeners used in clothes dryers
- Chlorine-type bleaches, detergents, and cleaning solvents found in household laundry rooms
- Adhesives used to fasten building products and other similar products

Areas likely to contain these products

- Dry cleaning / laundry areas and establishments
- Beauty salons
- Metal fabrication shops
- Swimming pools and health spas
- Refrigeration Repair shops
- Photo processing plants
- Auto body shops
- Plastic manufacturing plants
- Furniture refinishing areas and establishments
- New building construction
- Remodeling areas
- Garages with workshops

2.2. Ventilation and Combustion Air Requirements - Direct Vent

A Direct Vent appliance utilizes uncontaminated outdoor air piped directly to the appliance for combustion.

For Direct Vent installations involving only the PRESTIGE Solo, in which the minimum service clearances are maintained as listed in *Section 1.5 on page 2*, no ventilation openings are required, but may be necessary to equalize the air pressure with the outside.

For Direct Vent installations involving only the PRESTIGE Solo, in which the minimum service clearances are not maintained as listed in *Section 1.5 on page 2*, the space / enclosure must provide two openings for ventilation. The openings must be sized to provide 1 square inch of free area per 1,000 BTUH of boiler input. The openings shall be placed 12 inches from the top of the space and 12 inches from the floor of the space.

For installations in which the PRESTIGE Solo shares the space with air movers (exhaust fan, clothes dryers, fireplaces, etc.) and other combustion equipment (gas or oil) the space must be provided with adequate air openings to provide ventilation and combustion air to the equipment. To properly size the ventilation / combustion air openings, the installer must comply with the National Fuel Gas Code (NFPA 54 / ANSI Z223.1) for installations in the U.S. or CAN/CSA B149.1 for installations in Canada.

⚠ WARNING

The space must be provided with ventilation / combustion air openings properly sized for all make-up air requirements (exhaust fans, clothes dryers, fireplaces, etc.) and the total input of all appliances located in the same space as the PRESTIGE Solo, excluding the input of a Direct Vent PRESTIGE Solo which uses combustion air directly from the outside, thus additional free area for the openings is not required. Failure to provide or properly size the openings can result in substantial property damage, serious injury, or death.

2.3. Ventilation and Combustion Air Requirements - Category IV

A Category IV appliance utilizes uncontaminated indoor or outdoor air surrounding the appliance for combustion.

BEST PRACTICE

In order to reduce the potential risks associated with indoor contaminates (see list in Section 2.1 on page 3), flammable vapors and tight housing construction with little or no infiltration air, it is recommended to pipe uncontaminated combustion air directly from the outdoors to the appliance. This practice also promotes higher system efficiency by reducing heated indoor air from being exhausted from the house and replaced by cold infiltration air into the house.

For installations in which the PRESTIGE Solo shares the space with air movers (exhaust fan, clothes dryers, fireplaces, etc.) and other combustion equipment (gas or oil) the space must be provided with adequate air openings to provide ventilation and combustion air to the equipment. To properly size the ventilation / combustion air openings, the installer must comply with the National Fuel Gas Code (NFPA 54 / ANSI Z223.1) for installations in the U.S. or CAN/ CSA B149.1 for installations in Canada.

⚠ WARNING

The space must be provided with ventilation / combustion air openings properly sized for all make-up air requirements (exhaust fans, clothes dryers, fireplaces, etc.) and the total input of all appliances, including the PRESTIGE Solo when located in the same space. Failure to provide or properly size the openings can result in substantial property damage, serious injury, or death.

2.4. Methods of Accessing Combustion Air Into A Space - Category IV

2.4.1. Indoor Combustion Air

NOTICE

- *The methods listed in this chapter for accessing Indoor Combustion Air assume that the infiltration rate is adequate and not less than .40 ACH.*
- *For infiltration rates less than .40 ACH, reference the National Fuel Gas Code (NFPA 54 / ANSI Z223.1) for additional guidance.*

Opening Size and Location

Openings used to connect indoor spaces shall be sized and located in accordance with the following, see ***Fig. 1 below*** :

- ***Combining spaces on the same story.*** Each opening shall have a minimum free area of 1 sq. in./1000 Btu/hr of the total input rating of all gas utilization equipment in the space, but not less than 100 sq. inches. One opening shall commence within 12 inches of the top, and one opening shall commence within 12 inches of the bottom of the enclosure. The minimum dimension of air openings shall be not less than 3 inches.

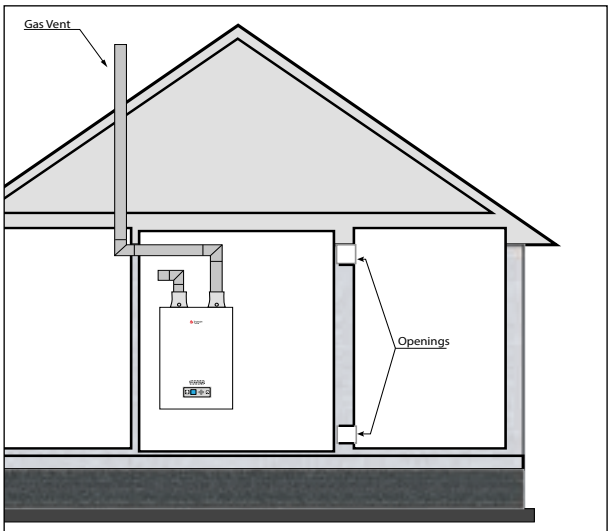

Fig. 1 - All Combustion Air from adjacent Indoor Spaces through Indoor Combustion Openings

- ***Combining spaces in different stories***. The volumes of spaces in different stories shall be considered as communicating spaces where such spaces are connected by one or more openings in doors or floors having a total minimum free area of 2 sq. in./1000 Btu/hr of total input rating of all gas utilization equipment.

2.4.2. Outdoor Combustion Air

BEST PRACTICE

Isolating the combustion appliance room from the rest of the building and bringing in uncontaminated outside air for combustion and ventilation is always preferred.

Opening Size and Location

The minimum dimension of air openings shall be not less than 3 inches

Openings used to supply combustion and ventilation air shall be sized and located in accordance with the following:

- ***One Permanent Opening Method*** . One permanent opening, commencing within 12 in. of the top of the enclosure, shall be provided as shown in ***Fig. 2 below.*** The equipment shall have clearances of at least 1 inch from the sides and 6 in. from the front of the appliance. The opening shall directly communicate with the outdoors or shall communicate through a vertical or horizontal duct to the outdoors or spaces that freely communicate with the outdoors and shall have a minimum free area of the following:
  - 1sq. in./3000 Btu/hr of the total input rating of all equipment located in the enclosures, and
  - Not less than the sum of the areas of all vent connectors in the space.

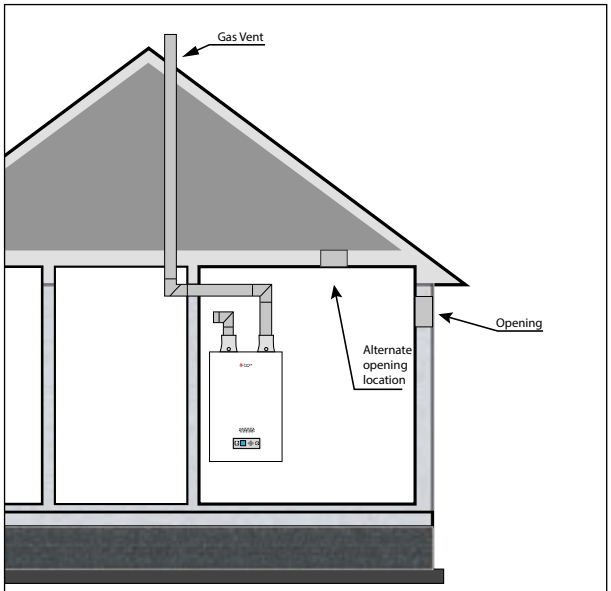

Fig. 2 - All Combustion Air from Outdoors Through One Permanent Air Opening

- *Two Permanent Opening Method*. Two permanent openings, one commencing within 12 in. of the top and one commencing within 12 in. of the bottom of the enclosure, shall be provided. The openings shall communicate directly, or by ducts, with the outdoors or spaces that freely communicate with the outdoors, as follows:
  - Where directly communicating with the outdoors or where communication to the outdoors is through vertical ducts, each opening shall have a minimum free area of 1 sq. in./4000 Btu/hr of total input rating of all equipment in the enclosure. ***See Fig. 3 below.***

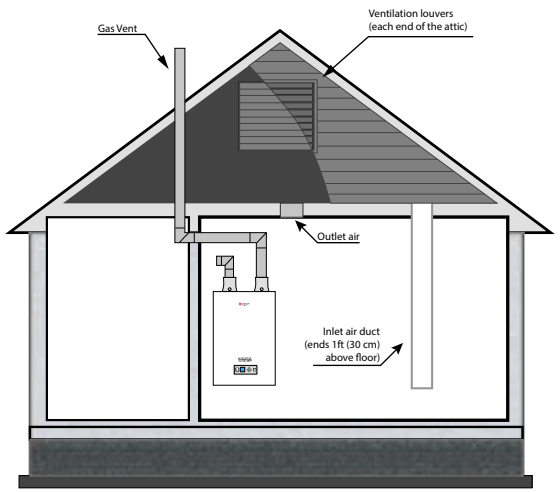

Fig. 3 - All Combustion Air from Outdoors Through Ventilated Attic

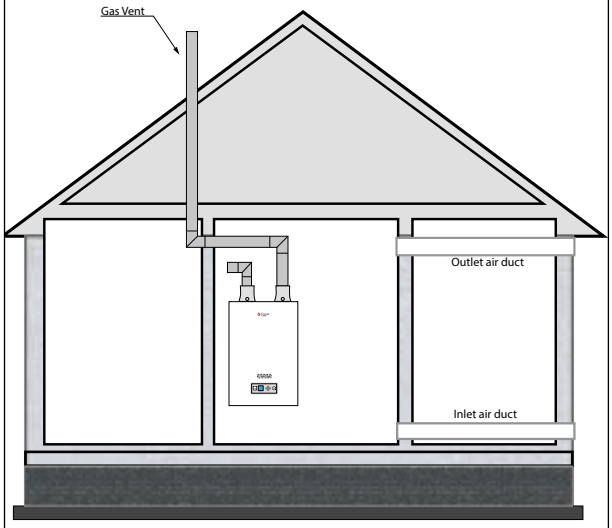

Fig. 4 - All Combustion Air from Outdoors Through Horizontal Ducts

  - Where communicating with the outdoors is through horizontal ducts, each opening shall have a minimum free area of not less than 1 sq.in./2000 Btu/hr of total input rating of all equipment in the enclosure. ***See Fig. 4 below.***

2.4.3 Combination of Indoor and Outdoor Combustion Air

Indoor Openings. Where used, openings connecting the interior spaces shall comply with ***Section 2.4.1 on page 5***.

Outdoor Opening(s) Location. Outdoor opening(s) shall be located in accordance with ***Section 2.4.2 on page 5***.

Outdoor Opening(s) Size. Outdoor opening(s) shall be calculated in accordance with the following:

- The ratio of the interior spaces shall be the available volume of all communicating spaces divided by the required volume.
- The outdoor size reduction factor shall be 1 minus the ratio of interior spaces.
- The minimum size of outdoor opening(s) calculated in accordance with the above outdoor air chapter multiplied by the reduction factor. The minimum dimension of air openings shall not be less than 3 in.

2.5. Combustion Air and Vent Piping

The PRESTIGE Solo requires a Category IV venting system, which is designed for pressurized venting and condensate.

The PRESTIGE Solo is certified as a Category IV or Direct Vent (sealed combustion) appliance. A Category IV appliance utilizes uncontaminated indoor or outdoor air surrounding the appliance for combustion. A Direct Vent appliance utilizes uncontaminated outdoor air piped directly to the appliance for combustion.

⚠ DANGER

Do not install the PRESTIGE Solo into a common vent with any other gas or oil appliances. This will cause flue gas spillage or appliance malfunction, which will result in substantial property damage, serious injury, or death.

BEST PRACTICE

In order to reduce the potential risks associated with indoor contaminates (see list in Section 2.1 on page 3), flammable vapors and tight housing construction with little or no infiltration air, it is recommended to pipe uncontaminated combustion air directly from the outdoors to the appliance. This practice also promotes higher system efficiency by reducing heated indoor air from being exhausted from the house and replaced by cold infiltration air into the house.

⚠ DANGER

Verify installed combustion air and vent piping are sealed gas tight and meet all provided instructions and applicable codes, failure to comply will result in serious injury, or death.

⚠ WARNING

Failure to properly support the vent system can cause the venting system to fail, resulting in substantial property damage, serious injury, or death.

NOTICE

Install combustion air and vent pipe as detailed in the PRESTIGE Vent Supplement included in the boiler installation envelope. Refer to optional vent kit instructions for additional vent installation instructions.

2.6. Removal of an Existing Boiler from a Common Vent System

BEST PRACTICE

When an existing boiler is removed from a common venting system, the common venting system is likely to be too large for proper venting of the remaining appliances. At the time of removal of an existing boiler, the following steps shall be followed with each appliance remaining connected to the common venting system placed in operation, while the other appliances remaining connected to the common venting system are not in operation.

1. Seal any unused openings in the common venting system.
2. Visually inspect the venting system for proper size and horizontal pitch and determine there is no blockage or restriction, leakage, corrosion and other deficiencies which could cause an unsafe condition.
3. Insofar as is practical:
   - Close all exterior building doors and windows and all doors between the space in which the appliances remaining connected to the common venting system are located and other spaces of the building.
   - Turn on clothes dryers and any appliance not connected to the common venting system.
   - Turn on any exhaust fans, such as range hoods and bathroom exhausts, so they will operate at maximum speed.
   - Do not operate a summer exhaust fan.
   - Close fireplace dampers.
4. Place in operation the appliance being inspected.
   - Follow the lighting instructions.
   - Adjust thermostat so appliance will operate continuously.
5. Test for spillage at the draft hood relief opening after 5 minutes of main burner operation. Use the flame of a match or candle, or smoke from a cigarette, cigar or pipe.
6. After it has been determined that each appliance remaining connected to the common venting system properly vents when tested as outlined above, return doors, windows, exhaust fans, fireplace dampers, and any other gas-burning appliance to their previous condition of use.
7. Any improper operation of the common venting system should be corrected so the installation conforms with the National Fuel Gas Code (NFPA 54 / ANSI Z223.1) for installations in the U.S. or CAN/CSA B149.1 for installations in Canada. When resizing any portion of the common venting system, the common venting system should be resized to approach the minimum size as determined using the appropriate tables in Chapter 13 of the National Fuel Gas Code (NFPA 54 / ANSI Z223.1) for installations in the U.S. or CAN/CSA B149.1 for installations in Canada.

⚠ DANGER

Do not install the PRESTIGE Solo into a common vent with any other gas or oil appliances. This will cause flue gas spillage or appliance malfunction, resulting in substantial property damage, serious injury, or death.

2.7. Carbon Monoxide Detector Installation

Triangle Tube follows the recommended advice of CPSC and requires the installation of a minimum of two (2) carbon monoxide detectors with an alarm and battery back-up if hard wired; one in the mechanical room where the boiler is located and another installed in the area outside each sleeping area for all installations.

Each carbon monoxide detector shall comply with NFPA 720 and be ANSI/UL 2034 listed and IAS certified.

Consult the local authority having jurisdiction for any additional carbon monoxide detector requirements in your area. See *Section 2.8 on page 8* for additional carbon monoxide detector requirements in Massachusetts.

⚠ WARNING

A byproduct of any gas fired appliance is carbon monoxide. Failure to install carbon monoxide detectors with alarms can result in serious injury, or death.

2.8. Commonwealth of Massachusetts Installation Requirements

For all side wall horizontally vented gas fueled equipment installed in every dwelling, building or structure used in whole or in part for residential purposes, including those owned or operated by the Commonwealth and where the side wall exhaust vent termination is less than seven (7) feet above finished grade in the area of the venting, including but not limited to decks and porches, the following requirements shall be satisfied:

2.8.1 Installation of Carbon Monoxide Detectors.

1. At the time of installation of the side wall horizontal vented gas fueled equipment, the installing plumber or gasfitter shall observe that a hard wired carbon monoxide detector with an alarm and battery back-up is installed on the floor level where the gas equipment is to be installed.
2. In addition, the installing plumber or gasfitter shall observe that a battery operated or hard wired carbon monoxide detector with an alarm is installed on each additional level of the dwelling, building or structure served by the side wall horizontal vented gas fueled equipment.
3. It shall be the responsibility of the property owner to secure the services of qualified licensed professionals for the installation of hard wired carbon monoxide detectors.
   a. In the event that the side wall horizontally vented gas fueled equipment is installed in a crawl space or an attic, the hard wired carbon monoxide detector with alarm and battery back-up may be installed on the next adjacent floor level.
   b. In the event that the requirements of this subdivision can not be met at the time of completion of installation, the owner shall have a period of thirty (30) days to comply with the above requirements; provided, however, that during said thirty (30) day period, a battery operated carbon monoxide detector with an alarm shall be installed.

2.8.2 Approved Carbon Monoxide Detectors.

Each carbon monoxide detector as required in accordance with the above provisions shall comply with NFPA 720 and be ANSI/UL 2034 listed and IAS certified.

2.8.3 Signage

A metal or plastic identification plate shall be permanently mounted to the exterior of the building at a minimum height of eight (8) feet above grade directly in line with the exhaust vent terminal for the horizontally vented gas fueled heating appliance or equipment.

The sign shall read, in print size no less than one half (1/2) inch in size, **"GAS VENT DIRECTLY BELOW. KEEP CLEAR OF ALL OBSTRUCTIONS".**

2.8.4 Inspection.

The state or local gas inspector of the side wall horizontally vented gas fueled equipment shall not approve the installation unless, upon inspection, the inspector observes carbon monoxide detectors and signage installed in accordance with the provisions of 248 CMR 5.08(2)(a) 1 through 4.

Exemptions

The following equipment is exempt from 248 CMR 5.08(2)(a) 1 through 4:

1. The equipment listed in Chapter 10 entitled "Equipment Not Required To Be Vented" in the most current edition of NFPA 54 as adopted by the Board; and
2. Product Approved side wall horizontally vented gas fueled equipment installed in a room or structure

separate from the dwelling, building or structure used in whole or in part for residential purposes.

2.8.5 Manufacturer Requirements - Gas Equipment Venting System Provided.

When the manufacturer of Product Approved side wall horizontally vented gas equipment provides a venting system design or venting system components with the equipment, the instructions provided by the manufacturer for installation of the equipment and the venting system shall include:

1. Detailed instructions for the installation of the venting system design or the venting system components; and
2. A complete parts list for the venting system design or venting system.

2.8.6 Manufacturer Requirements - Gas Equipment Venting System Not Provided.

When the manufacturer of a Product Approved side wall horizontally vented gas fueled equipment does not provide the parts for venting the flue gases, but identifies "special venting systems", the following requirements shall be satisfied by the manufacturer:

1. The referenced "special venting system" instructions shall be included with the appliance or equipment installation instructions; and
2. The "special venting systems" shall be Product Approved by the Board, and the instructions for that system shall include a parts list and detailed installation instructions.

A copy of all installation instructions for all Product Approved side wall horizontally vented gas fueled equipment, all venting instructions, all parts lists for venting instructions, and/or all venting design instructions shall remain with the appliance or equipment at the completion of the installation.

INTENTIONALLY LEFT BLANK

3.1. Handling Instructions

The PRESTIGE Solo is generally easier to handle and maneuver once removed from the shipping carton.

To remove the shipping carton:

NOTICE

Use care not to drop, bump or rotate the boiler upside down, as damage to the boiler will result.

1. Remove any shipping straps and open the side of the shipping carton.
2. Slide the unit with the foam inserts out of the carton.
3. Discard all packing materials.

3.2. Wall Mounting Installation

The PRESTIGE Solo should be wall mounted using the bracket provided with the boiler. The PRESTIGE Solo is not designed for floor installation. If floor installation is required, an optional floor stand is available through Triangle Tube. The PRESTIGE Solo is not to be installed on carpeting

⚠ WARNING

The wall used for mounting the PRESTIGE Solo must be vertically plumb and capable of supporting a minimum 130 pounds [59 kg] for the PRESTIGE Solo 80/110, 175 pounds [80 kg] for PRESTIGE Solo 155/175/250 and 265 pounds [120 Kg] for PRESTIGE Solo 299/399. Failure to comply with these requirements can result in substantial property damage, serious injury, or death.

3.3. Wall Mounting Guidelines

The wall-mounting bracket is designed for stud spacing of 12 inch or 16 inch on centers. For unconventional stud spacing, a solid / secure mounting surface must be provided for installation of the bracket.

1. For applications using wood studs, install the bracket using the lag screws provided with the boiler. Ensure both lag screws are installed securely in the studs.
2. For applications using metal studs, install the bracket to the studs using 3/16" toggle bolts and washers.
3. DO NOT mount or attempt to mount the wall bracket to hollow sheet rock or lath walls using anchors. Only install boiler to studs or equivalent wood structure.
4. For applications using solid walls (rock, concrete, brick, cinder block, etc.), install the wall bracket using anchors (double expansion shields) and bolts with washers provided with the boiler.
5. The boiler is too heavy and bulky for a single person to lift and attempt to mount; a minimum of 2 people are required for mounting the boiler.

⚠ WARNING

Use extreme care not to drop the boiler or cause bodily injury while lifting or mounting the boiler onto the wall bracket. Once mounted, verify that the boiler is securely attached to the bracket and wall. Failure to comply with the above guidelines can result in substantial property damage, serious injury, or death.

3.4. Stud Walls - Installation

3.4.1 PRESTIGE Solo 80/110/155/175/250

1. Locate the studs in the general area of the boiler installation.
2. Place the wall-mounting bracket on the wall centering the mounting slots with the stud centers and ensuring the upper edge of the bracket is away from the wall.
3. Level the bracket, while maintaining it's centering with the studs and use a pencil to mark the location of the mounting slots.
4. Remove the bracket from the wall and drill a 1/4" diameter by 3" deep hole in the center of each mark. For applications using metal studs and 3/16" toggle bolts, drill the required clearance hole.
5. Reposition the bracket on the wall and align with the mounting slots/holes. Insert the two lag screws provided (or toggle bolts for metal studs) through the mounting slots/holes and loosely tighten.
6. Level bracket and tighten screws (bolts for metal studs) securely making sure not to over-tighten to avoid damaging drywall or plaster.

3.4.2 PRESTIGE Solo 299/399

1. To distribute the weight of the boiler evenly when mounting onto a stud wall it is recommended to use the PRESTIGE Solo Wall Frame kit.
2. When using the wall frame to mount the boiler, reference the kit installation instructions and ensure the frame is securely fastened to the wall.
3. If the structure of the wall is questionable in supporting a minimum weight of 265 pounds [120 kg.], it is recommended to use the optional floor stand.

3.5. Wall Bracket Installation - Solid Walls

1. Locate the general area of the boiler installation.
2. Place the wall-mounting bracket on the wall ensuring the upper edge of the bracket is away from the wall.
3. Level the bracket and use a pencil to mark the location of the mounting slots on the wall.
4. Remove the bracket from the wall and drill a 5/8" diameter by 1-3/8" deep hole in the center of each mark.
5. Install the provided anchors flush or slightly recessed in the drilled holes with threaded side facing down.
6. Reposition the bracket on the wall and align with the mounting slots/holes. Insert the two bolts with washers through the mounting slots/holes and loosely tighten.
7. Level bracket and tighten bolts securely.

3.6. Boiler Mounting

1. Obtain assistance in lifting the boiler onto the wall bracket.
2. Install the boiler making sure the boiler mounting lip located along the upper edge of the rear jacket panel engages the wall-mounting bracket. Ensure the boiler is seated properly and is secure.

4.1. General Piping Requirements

- All plumbing must meet or exceed all local, state and national plumbing codes.
- Support all piping using hangers. DO NOT support piping by the unit or its components.
- Use isolation valves to isolate system components.
- Install unions for easy removal of the PRESTIGE Solo from the system piping.

⚠ WARNING

Use a two-wrench method when tightening field piping onto the boiler piping connections. Use one wrench to prevent the boiler connections from turning and the second to tighten field piping. Failure to support the boiler piping connections could damage piping, causing a leak, resulting in substantial property damage, serious injury, or death.

4.2. Pressure Relief Valve

1. The PRESTIGE Solo is supplied with a 30 psi pressure relief valve and must be piped using the PRV connection as shown in *Fig. 5 below*.
2. To avoid potential water damage to the surrounding area or potential scalding hazard due to the operation of the relief valve, the discharge piping:
   - Must be connected to the discharge outlet of the relief valve and directed to a safe place of disposal.
   - Length should be as short and direct as possible. The size of the discharge line must not be reduced, maintain the same size as the outlet of the relief valve.
   - Must be directed downward towards the floor at all times. The piping should terminate at least 6 inches [153 mm] above any drain connection to allow clear visibility of the discharge.
   - Must terminate with a plain end, not with a threaded end. The material of the piping must have a serviceable temperature rating of 250ºF or greater.
   - Must not be subject to conditions where freezing could occur.
   - Must not contain any shut-off valves or obstructions. No shut-off valve should be piped between the boiler and relief valve.

⚠ WARNING

Failure to comply with the guidelines on installing the pressure relief valve and discharge piping can result in substantial property damage, serious injury, or death.

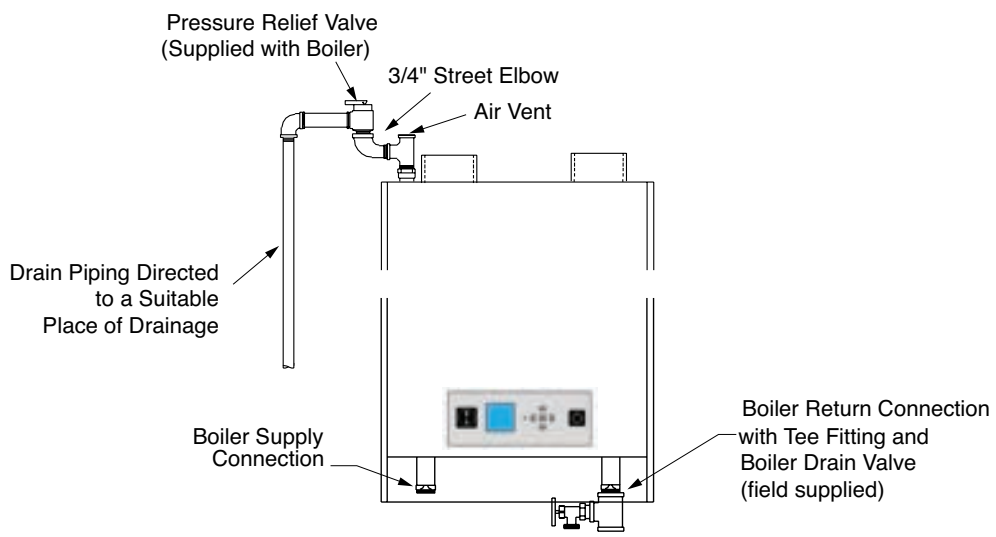

Fig. 5 - Pressure Relief Valve and Boiler Drain Valve Installation

4.3. Boiler Air Vent

NOTICE

This boiler is supplied with a special automatic air vent that will provide reliable operation in purging air from the boiler. The hygroscopic cap supplied with the automatic air vent MUST remain tight at all times on the air vent body. The hygroscopic cap has a membrane which expands upon contact with water and seals the air vent until the membrane dries up due to new air forming in the air vent.

1. Make sure to fully tighten the cap on the air vent during initial installation.
2. Never loosen the hygroscopic cap to allow air to escape the air vent. Air will exit with the cap fully tightened in place.
3. If the hygroscopic cap is not fully tightened, water may leak from the cap. Simply tighten the cap securely.

4.4. Low Water Cutoff Device

- The PRESTIGE Solo is equipped with a factory installed pressure sensor type Low Water Cut Off (LWCO).
- The minimum operating system pressure is 10 psig.
- Check local codes if a Low Water Cutoff is required. If so, determine if this device meets their requirements.

NOTICE

The PRESTIGE Solo control system also senses the water temperatures entering and exiting the heat exchanger to provide protection against low water conditions. Where local codes and jurisdiction do not accept a pressure device for low water protection, the jurisdiction may accept this PRESTIGE Solo integral control function as a means of providing low water protection.

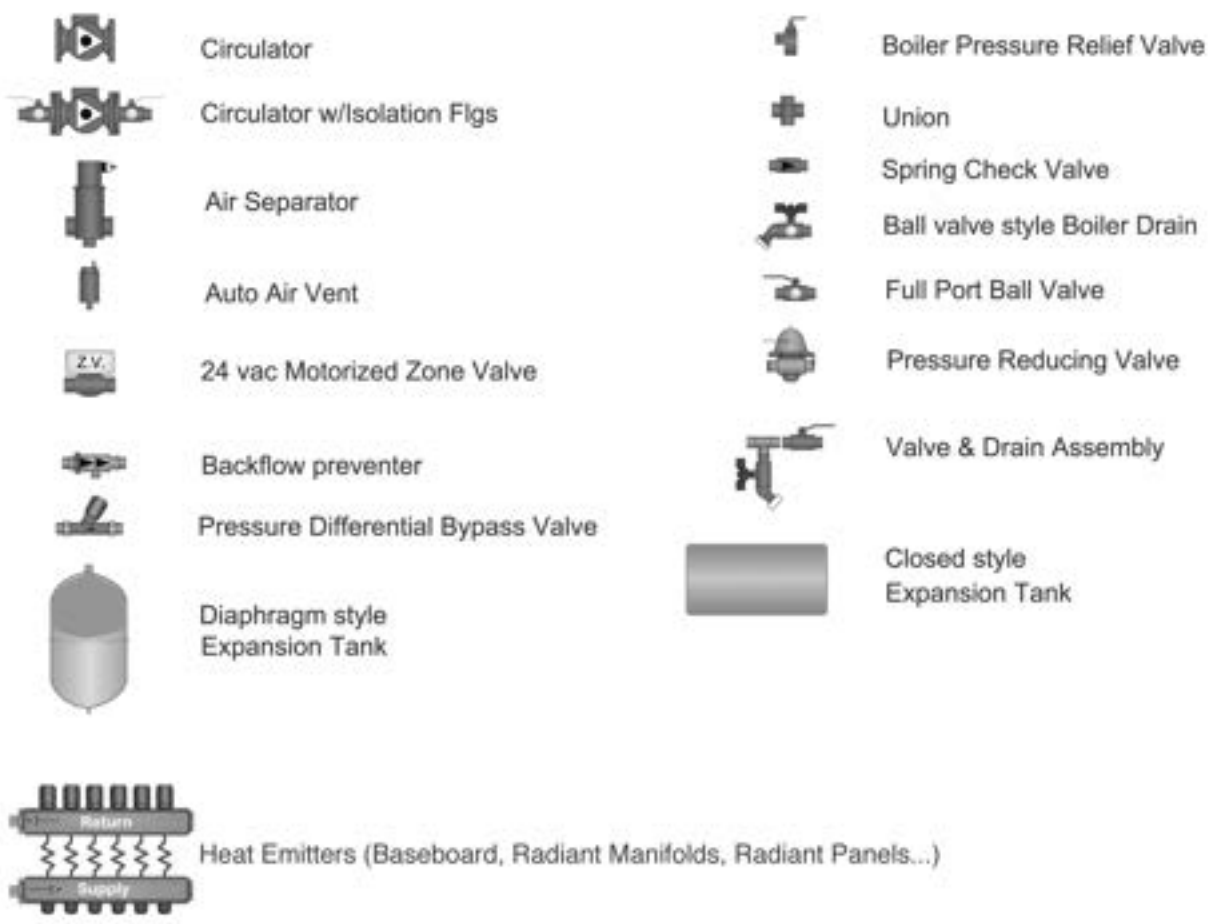

Fig. 6 - Piping Component Legend

4.5. Additional Limit Control

If a separate Low Water Cut Off (LWCO) is required by the local jurisdiction or when the boiler is installed above the system piping, the following guidelines must be followed:

- The LWCO must be designed for water installations, electrode probe-type is recommended.
- The LWCO must be installed in a tee connection on the boiler supply piping above the boiler.
- Wiring of the LWCO to the PRESTIGE Solo is done directly onto the low voltage terminal strip. Reference *Fig. 21 on page 35* for available external limit (manual or auto reset) terminals.

If the installation is to comply with ASME or Canadian requirements, an additional high temperature limit may be required. Consult local code requirements to determine compliance. The limit should be installed as follows:

- Install the limit in the boiler supply piping between the boiler and any isolation valve.
- Consult heat exchanger for maximum temperature set point.
- For wiring of the limit, reference *Fig. 21 on page 35.* Wire the limit to the manual reset terminals on the low voltage terminal strip. An open manual reset limit will require a manual reset of the control.

4.6. Backflow Preventer

- Use a backflow preventer valve in the make-up water supply to the unit as required by local codes.

4.7. Boiler System Piping Applications

BEST PRACTICE

- *It is recommended on all piping applications to utilize a primary/secondary piping arrangement as a means to provide freeze protection of the boiler, which is an integral function of the boiler control. Maintain at least the minimum boiler flow rate shown in the Graphs of Chapter 19 on page 87. For other piping arrangements, contact Triangle Tube Technical Support or consult other approved/recognized design arrangements.*
- *On piping applications utilizing a single zone or other recognized piping design arrangements, it is recommended that the installer uses flow/check valves with weighted seats at or near the PRESTIGE Solo to prevent gravity circulation.*

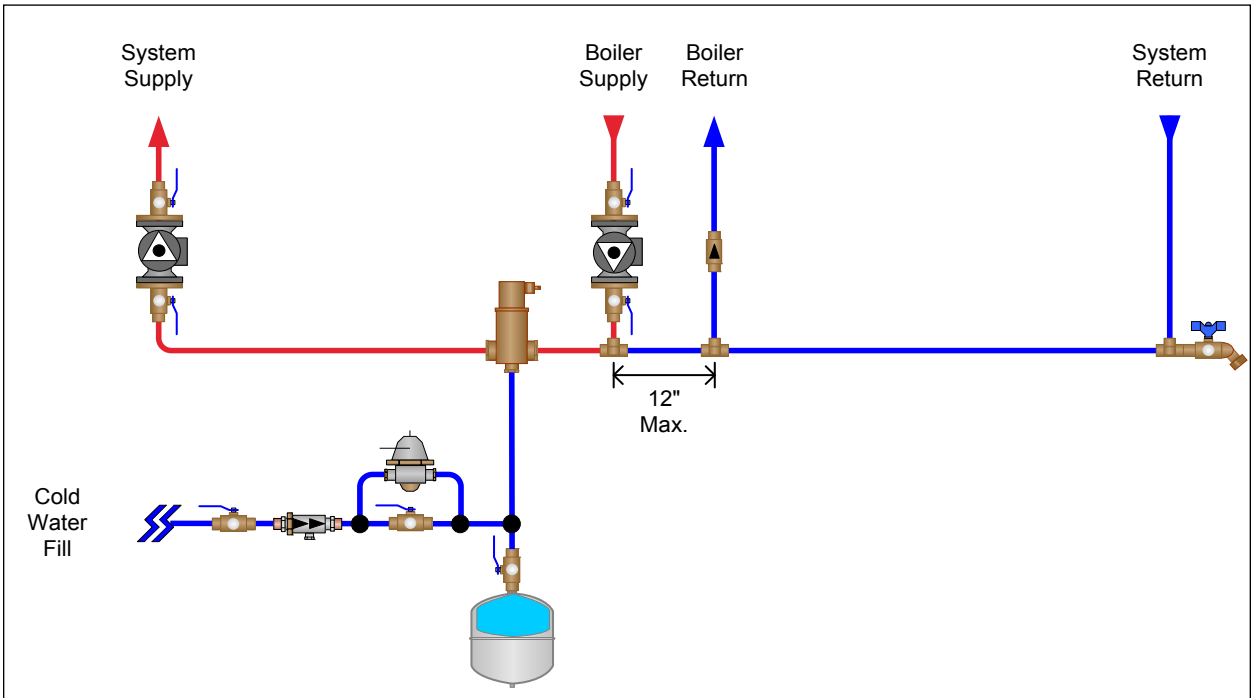

Fig. 7 - Near Boiler Piping - Diaphragm Expansion Tank

4.8. Expansion Tank and Makeup Water

Ensure the expansion tank is properly sized for the boiler volume, (3 gallons [12 L] for the PRESTIGE Solo 80/110, 5 gallons [19 L] for the PRESTIGE Solo 155/175/250, 7 gallons [26 L] for PRESTIGE Solo 299/399), the system water volume, and the system water temperature.

CAUTION

Undersized expansion tanks will cause system water to be lost through the pressure relief valve and cause additional makeup water to be added to the system. Eventual boiler heat exchanger failure can result due to this excessive makeup water addition.

The expansion tank must be located as shown in *Fig. 7 on page 15 and Fig. 8 below*, when using a primary/secondary piping arrangement or as per recognized design methods. Refer to the expansion tank manufacturer for additional installation details.

Connect the expansion tank to an air separator only if the air separator is located on the suction side (inlet) of the system circulator. Always locate and install the system fill connection at the same location as the expansion tank connection to the system.

4.8.1 Diaphragm Expansion Tank

Always install an automatic air vent on top of the air separator to remove residual air from the system.

4.8.2 Closed-Type Expansion Tank

It is recommended to pitch any horizontal piping upwards toward the expansion tank 1 inch per 5 feet of piping. Use 3/4" piping to the expansion tank to allow air within the system to rise.

NOTICE

DO NOT install automatic air vents on a closed-type expansion tank system. Air must remain in the system and be returned to the expansion tank to provide an air cushion. An automatic air vent would cause air to be vented from the system resulting in a water-logged expansion tank.

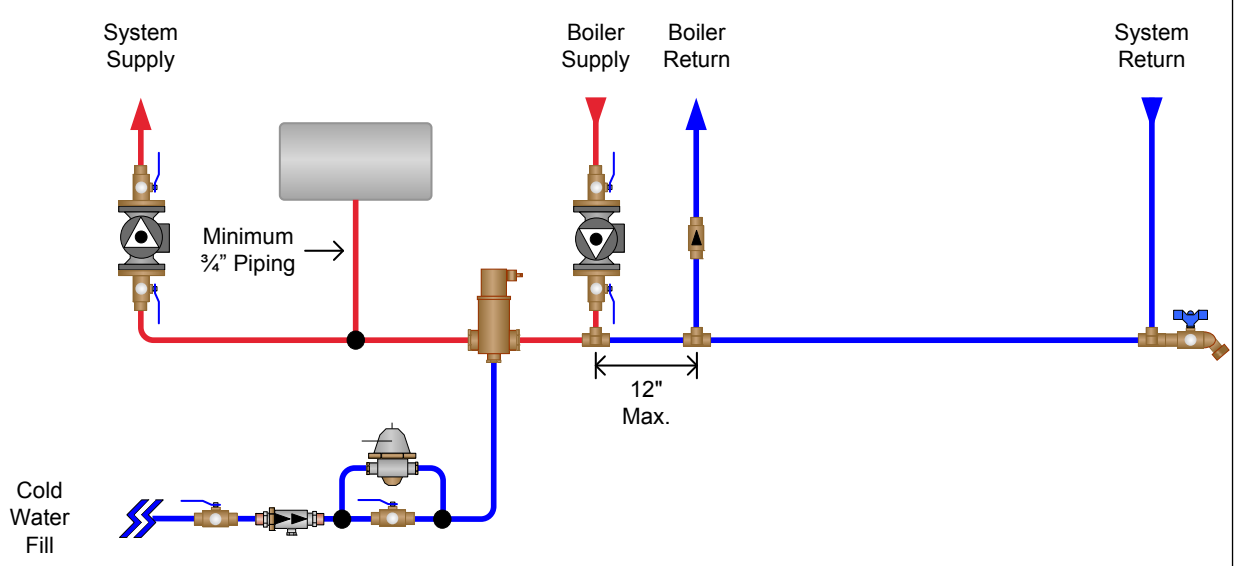

Fig. 8 - Near Boiler Piping - Closed Type Expansion Tank

4.9. Circulator

A circulator with flow check must be utilized with the PRESTIGE Solo. The circulator, when wired directly to the PRESTIGE Solo, will allow for domestic hot water priority and provide circulation for the freeze protection feature of the boiler control. See the Graphs in *Chapter 19 on page 87* for pressure drop and minimum flow rate through the boiler.

4.10. Sizing Primary Piping

See *Fig. 9 on page 18 through Fig. 13 on page 22*, for recommended piping arrangements based on various applications. Size the piping and system components required in the space heating system using recognized design methods.

4.11. Domestic Hot Water System Piping

See *Fig. 9 on page 18 through Fig. 12 on page 21* for recommended piping to a DHW system. This recommended piping configuration ensures priority is given to the production and recovery of DHW.

The piping for DHW is separate from the boiler system piping and does not require a primary / secondary piping configuration.

To wire the DHW circulator to the boiler control module, reference *Chapter 8 on page 35*.

4.12. System Piping - Zone Circulators

Connect the PRESTIGE Solo to the system piping as shown in *Fig. 9 on page 18* when zoning with zone circulators.

The installer must provide a separate circulator for each zone of space heating.

NOTICE

To ensure an adequate flow rate through the PRESTIGE Solo, the boiler supply and return piping size must be a minimum of 1 inch for the PRESTIGE Solo 80/110, 1-1/4 inch for the PRESTIGE Solo 155/175/250 and 1-1/2 inch for the PRESTIGE Solo 299/ 399.

4.13. System Piping - Zone Valves

Connect the PRESTIGE Solo to the system piping as shown in *Fig. 10 on page 19* when zoning with zone valves.

NOTICE

To ensure an adequate flow rate through the PRESTIGE Solo, the boiler supply and return piping size must be a minimum of 1 inch for the PRESTIGE Solo 80/110, 1-1/4 inch for the PRESTIGE Solo 155/175/250 and 1-1/2 inch for the PRESTIGE Solo 299/399.

4.14. System Piping - Through Boiler

Primary / secondary piping is preferred, but is not required for smaller systems (1 to 3 zones) provided that at least the minimum flow rate through the boiler is maintained at all times. The circulator must be sized to overcome the pressure drop through the system as well as the Prestige Solo. See the Graphs in *Chapter 19 on page 87* for pressure drop and minimum flow rate through the boiler.

Fig. 11 on page 20 illustrates a multiple zone valve system with a single system/boiler circulator. A by-pass loop with a pressure differential valve must be installed on the system piping.

Fig. 12 on page 21 illustrates a single zone system utilizing the boiler circulator as the system circulator.

PRESET PUMP CONFIGURATION 4

Heat Call	Pump 4	Pump 3	DHW Pump	CH Pump
CH1	OFF	ON	OFF	ON
CH2	ON	ON	OFF	OFF
DHW	OFF	OFF	ON	OFF

NOTICE

Consult the CTRLMax Control Supplement for information on setting the required Pre-set Pump Configuration.

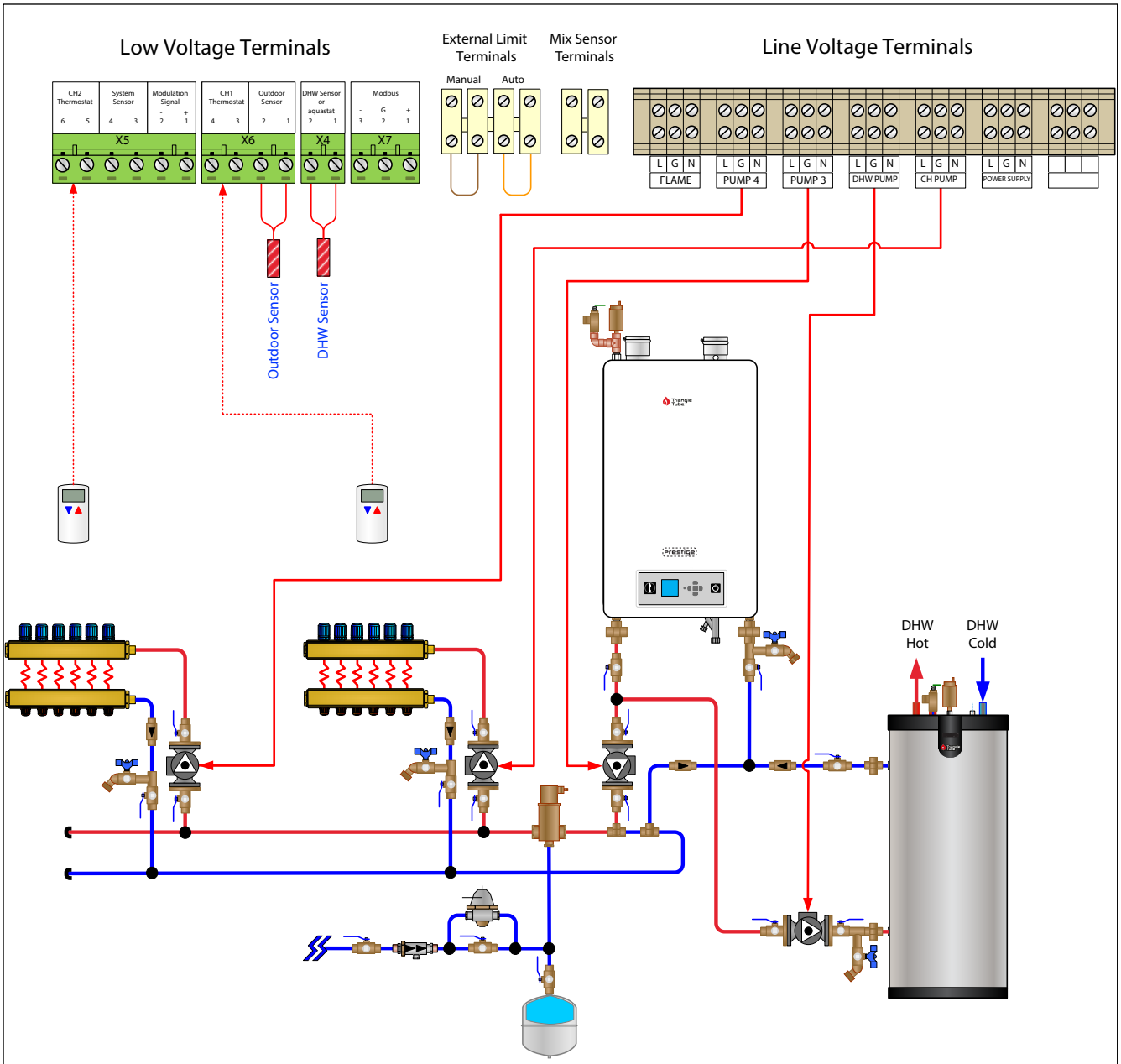

Fig. 9 - System Piping - Zoning with Zone Circulators

PRESET PUMP CONFIGURATION 3

Heat Call	Pump 4	Pump 3	DHW Pump	CH Pump
CH1	OFF	ON	OFF	ON
CH2	OFF	ON	OFF	ON
DHW	OFF	OFF	ON	OFF

NOTICE

Consult the CTRLMax Control Supplement for information on setting the required Pre-set Pump Configuration.

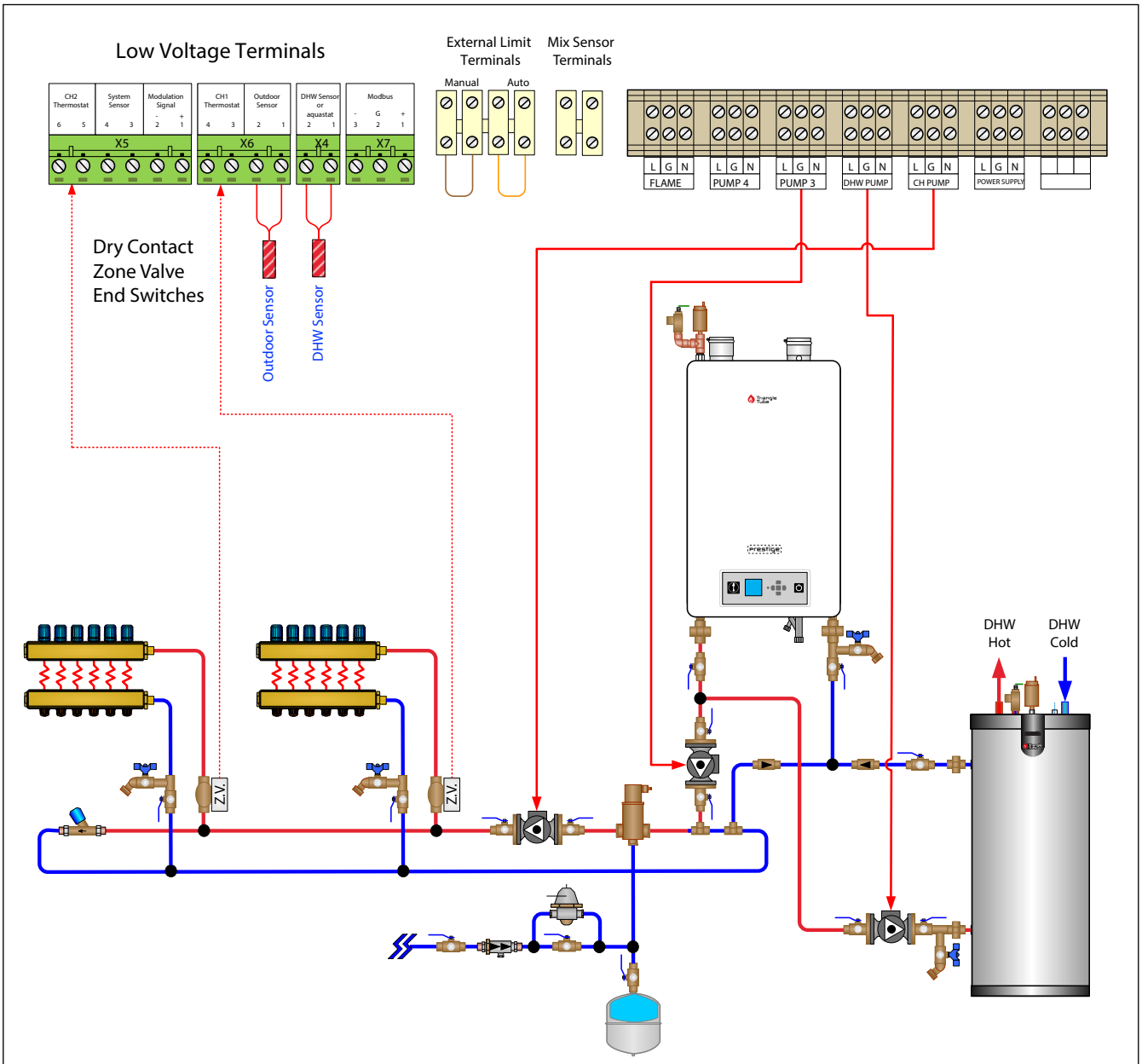

Fig. 10 - System Piping - Zoning with Zone Valves

PRESET PUMP CONFIGURATION 3

Heat Call	Pump 4	Pump 3	DHW Pump	CH Pump
CH1	OFF	ON	OFF	ON
CH2	OFF	ON	OFF	ON
DHW	OFF	OFF	ON	OFF

NOTICE

Consult the CTRLMax Control Supplement for information on setting the required Pre-set Pump Configuration.

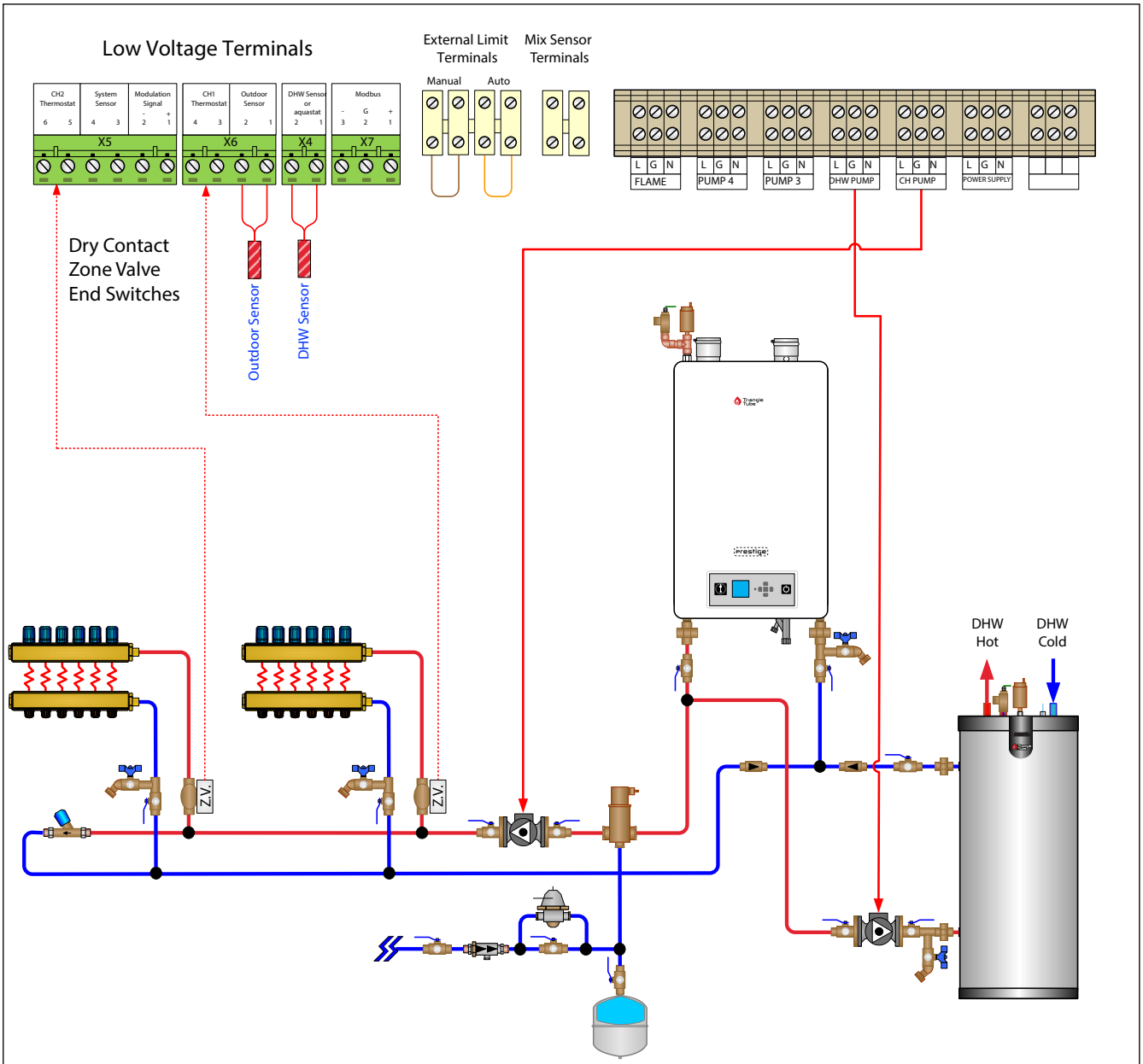

Fig. 11 - System Piping - Multiple Zone Valve with Single System/Boiler Circulator

PRESET PUMP CONFIGURATION 1

Heat Call	Pump 4	Pump 3	DHW Pump	CH Pump
CH1	OFF	ON	OFF	ON
CH2	ON	ON	OFF	OFF
DHW	OFF	ON	ON	OFF

NOTICE

Consult the CTRLMax Control Supplement for information on setting the required Pre-set Pump Configuration.

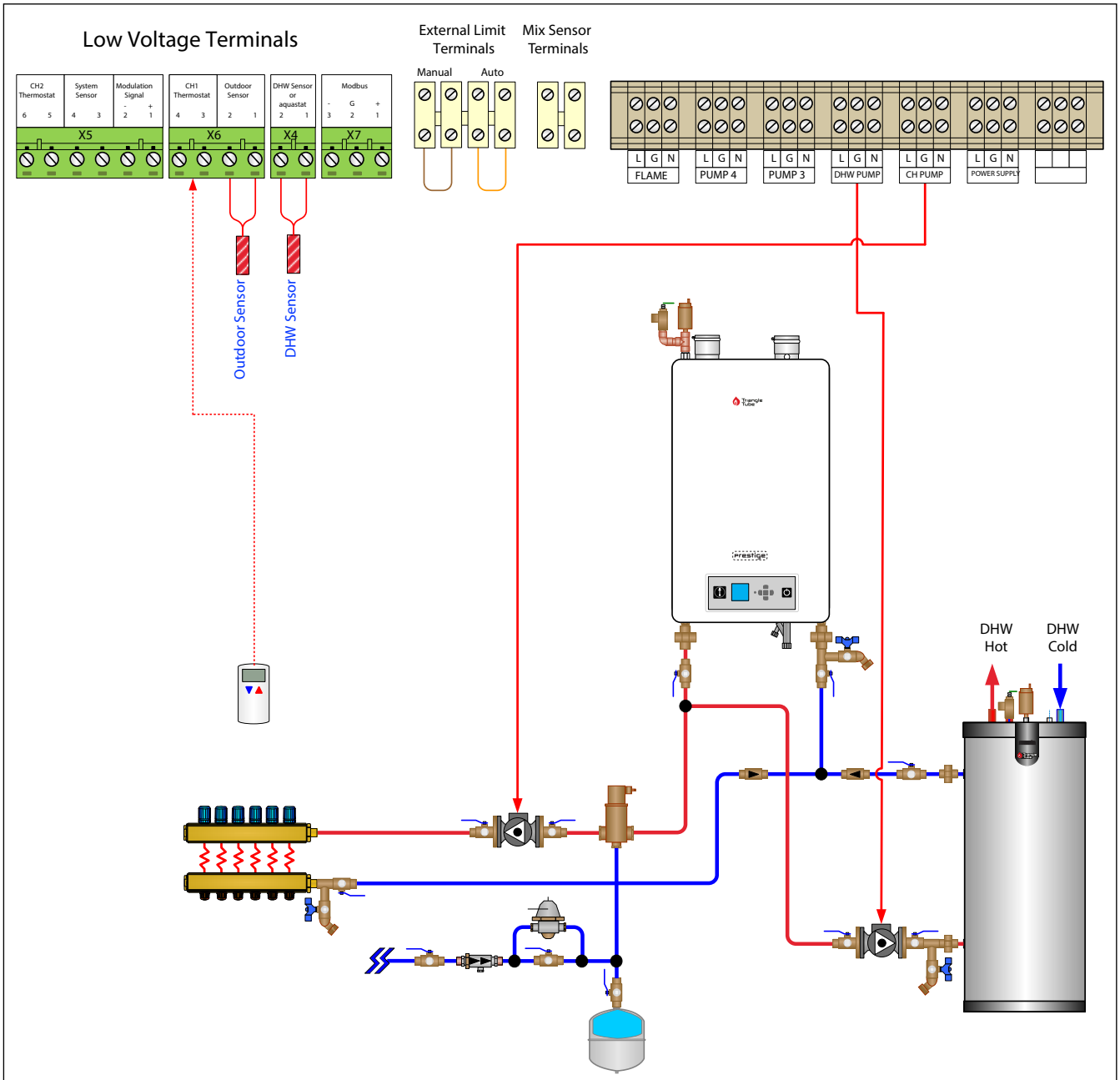

Fig. 12 - System Piping - Single Zone System with Single System/Boiler Circulator

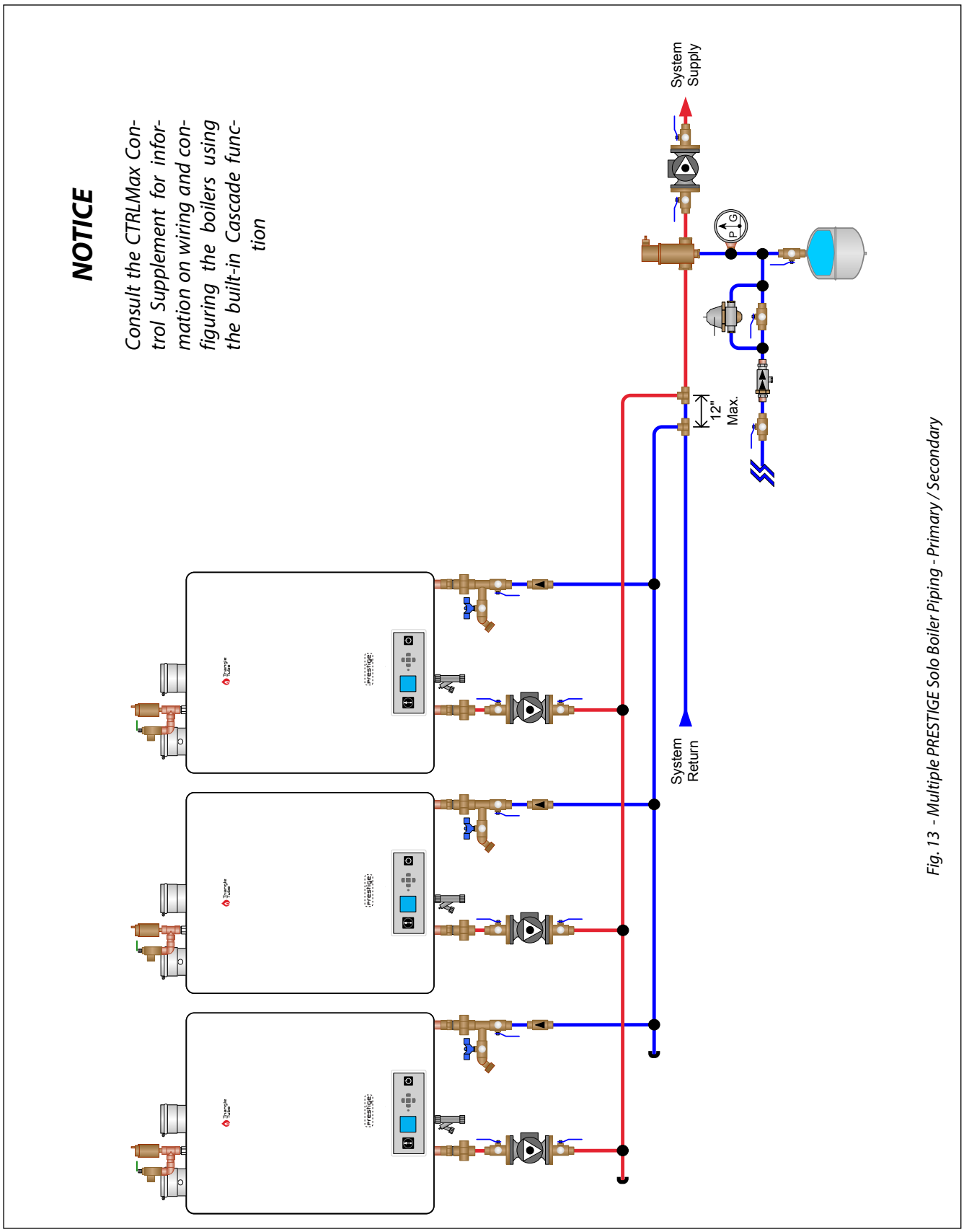

NOTICE

Consult the CTRLMax Control Supplement for information on wiring and configuring the boilers using the built-in Cascade function

Fig. 13 - Multiple PRESTIGE Solo Boiler Piping - Primary / Secondary

4.15. System Piping - Radiant Heating

The heat exchanger design of the PRESTIGE Solo allows operation in a condensing mode. This feature requires no regulation of the return water temperature back to the boiler in radiant heating applications.

The design and construction of the PRESTIGE Solo heat exchanger allows the installation of the boiler on systems with non - oxygen barrier tubing.

NOTICE

DO NOT install a SMART indirect water heater along with the PRESTIGE Solo in systems with non-oxygen barrier tubing. Failure to comply will result in premature failure of the SMART indirect water heater.

The boiler water supply temperature can be maintained by the PRESTIGE Solo, potentially eliminating the need for a mixing system to achieve the desired temperature if all zones of heat require the same temperature set point.

It is recommended to install a high temperature limit to ensure that the primary supply temperature does not exceed the maximum allowable temperature for the radiant tubing.

NOTICE

The addition of a high temperature limit is important if the PRESTIGE Solo is connected to a domestic hot water system, which requires a high primary supply water temperature.

Size the system piping and circulator to provide the flow needed for the radiant system.

NOTICE

To ensure an adequate flow rate through the PRESTIGE Solo, the boiler supply and return piping size must be a minimum of 1 inch for the PRESTIGE Solo 80/110, 1-1/4 inch for the PRESTIGE Solo 155/175/250 and 1-1/2 inch for the PRESTIGE Solo 299/399.

4.16. System Piping - Special Application

If the boiler is used in conjunction with a chilled water/medium system, the boiler and chiller must be piped in parallel. Install flow/check valves to prevent the chilled medium from entering the boiler.

If the boiler is used to supply hot water to the heating coils of an air handler where they may be exposed to chilled air circulation, install flow/check valves or other automatic devices to prevent gravity circulation of the boiler water during cooling cycles.

4.17. System Piping - Multiple Units Installation

Use a balanced manifold system as the primary / secondary connection to the space heating piping as shown in *Fig. 13 on page 22*.

For the space heating piping, refer to the applications mentioned in this manual or use recognized design methods.

INTENTIONALLY LEFT BLANK

5.1. Installing Vent and Combustion Air

⚠ DANGER

The PRESTIGE Solo must be vented and supplied with combustion air as shown in the PRESTIGE Vent Supplement, included in the installation envelope. Refer to instructions for parts list and method of installation.

Once installation is completed, inspect the vent and combustion air system thoroughly to ensure systems are airtight, properly supported, and comply with the instructions given in the venting supplement and are within all requirements of applicable codes. Failure to comply with the venting and combustion air piping installation requirements will result in substantial property damage, serious injury, or death.

NOTICE

Contact Triangle Tube for other venting options including PVC Concentric Vent/Air Termination and Stainless Steel or PVC Flush Mount Horizontal Terminations. Refer to the instructions included with these kits for method of installation.

5.2. Installing Condensate Drain Assembly

1. Locate the condensate drain assembly and ensure the metal washer is installed as shown in *Fig. 14 on page 26*.

NOTICE

The installer may want to fill the condensate drain assembly with water prior to assembling on the unit.

⚠ WARNING

Do not operate the boiler without the factory-supplied condensate drain assembly installed. Operation of the boiler without the condensate drain assembly installed can result in property damage, serious injury, or death.

2. Install the condensate drain assembly on the boiler condensate drain by pushing the condensate drain assembly up until it stops.
3. Tighten the condensate drain assembly retaining nut.

⚠ WARNING

- **Ensure installation of the condensate drain assembly included the metal washer. Failure to comply could result in the assembly dislocating from the boiler. Dislocation of the condensate drain assembly can result in property damage, serious injury, or death.**
- **Ensure the condensate drain assembly contains the plastic ball. Do not install the condensate drain assembly if the ball is lost or missing, replace the entire assembly. Installing the condensate drain assembly without the plastic ball can result in substantial property damage, serious injury, or death.**

4. Remove the compression nut and rubber seal from the condensate drain assembly drain outlet.
5. Slide the compression nut and rubber seal over the 3/4" x 2' flexible tube provided.

NOTICE

The use of 3/4" PVC or CPVC pipe is also acceptable. If 3/4" pipe is used, deburr and chamfer pipe to allow mating onto the drain assembly.

6. Thread the rubber seal into the compression nut to ease installation of the tube to the condensate drain assembly.
7. Seat the tube onto the condensate drain assembly and tighten the compression nut. **Hand tight only!**

NOTICE

- *The installer may opt to use 13/16" ID tubing in lieu of provided tube.*
- *The drain line materials must be an approved material by the authority having jurisdiction. In absence of such authority, PVC and CPVC piping must comply with ASTM D1785 or D2845. The cement and primer used on the piping must comply with ASME D2564 or F493. For installations in Canada, use ULC certified PVC or CPVC pipe, fittings and cement/primer.*

8. Route the tube from the condensate drain assembly to a floor drain or condensate pump.

NOTICE

When selecting and installing a condensate pump, ensure the pump is approved for use with condensing appliances. The pump should be equipped with an overflow switch to prevent property damage from potential condensate spillage.

9. The PRESTIGE Solo will typically produce a condensate that is considered slightly acidic with a pH content below 4.0. Install a neutralizing filter if required by authority having jurisdiction.

⚠ WARNING

The condensate drain assembly must remain filled with water. Extended periods of non use or high temperature operation may allow the water to evaporate. Periodically check the water level in the condensate drain assembly and fill with water as necessary. Failure to keep the condensate drain assembly full of water can result in substantial property damage, serious injury, or death.

CAUTION

The condensate drain assembly must remain unobstructed and allow unrestricted flow of condensate. The condensate should not be subject to conditions where freezing could occur. If the condensate is subjected to freezing or becomes obstructed , it can leak, resulting in potential water damage to the boiler and surrounding area.

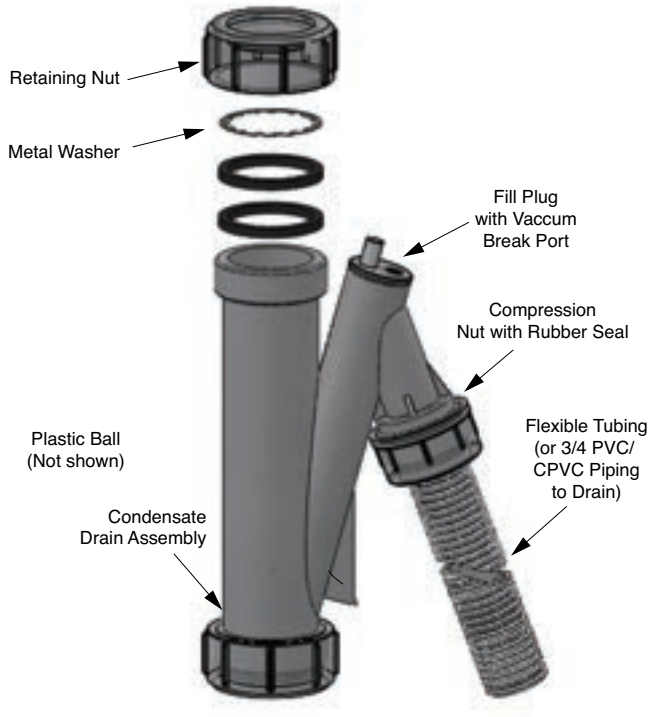

Fig. 14 - Condensate Drain Assembly

6.1. Gas Supply Piping Connection

NOTICE

The gas supply piping must be installed in accordance to all applicable local, state, national codes, and utility requirements.

1. Install a 1/2" NPT for PRESTIGE Solo 80/110, 3/4" NPT for PRESTIGE Solo 155/175/250 or 1" NPT for PRESTIGE Solo 299/399 pipe union at the gas nipple, for ease of service.
2. Install a manual shutoff valve in the gas supply piping as shown in *Fig. 15 below*. For installations in Canada, the installer must tag and identify the main shutoff valve.
3. Install a sediment trap (drip leg) on the gas supply line prior to connecting to the PRESTIGE Solo gas train as shown in *Fig. 15 below*.
4. Support the gas piping using hangers. Do not support the piping by the unit or its components.
5. Purge all air from the gas supply piping.
6. Before placing the PRESTIGE Solo into operation, check and test all connections for leaks.
   - Close the manual shutoff valve during any pressure test with less than 13"w.c..
   - Disconnect the PRESTIGE Solo and its gas valve from the gas supply piping during any pressure test greater than 13"w.c..

⚠ WARNING

Do not check for gas leaks with an open flame. Use a gas detection device or bubble test. Failure to check for gas leaks can cause substantial property damage, serious injury, or death.

7. Use pipe dope compatible with natural and propane gases. Apply sparingly only to the male threads of pipe joints so that pipe dope does not block gas flow.

⚠ WARNING

- **Failure to apply pipe dope as detailed above can result in substantial property damage, serious injury, or death.**
- **Use a two-wrench method when tightening field piping onto the boiler piping connections. Use one wrench to prevent the boiler connections from turning and the second to tighten field piping. Failure to support the boiler piping connections could damage piping, causing a leak, resulting in substantial property damage, serious injury, or death.**

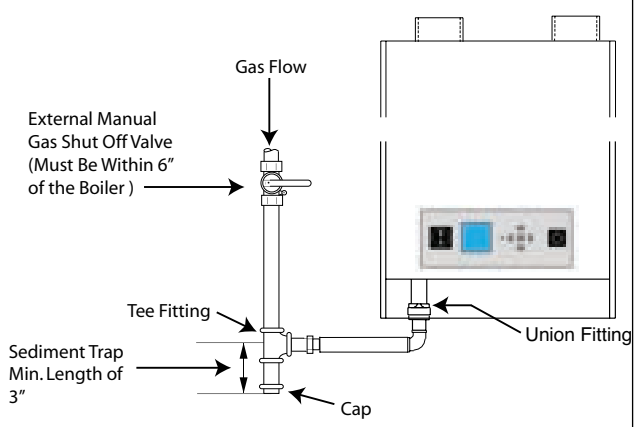

Fig. 15 - Recommended Gas Supply Piping

6.2. Natural Gas

6.2.1 Pipe Sizing

Refer to *Table 1 below* for schedule 40 metallic pipe length and diameter requirements for natural gas, based on rated PRESTIGE Solo input (divide by 1,000 to obtain cubic feet per hour).

- Table 1 is based on Natural Gas with a specific gravity of 0.60 and a pressure drop through the gas piping of 0.30"w.c..
- For additional gas pipe sizing information, refer to National Fuel Gas Code (NFPA 54 / ANSI Z223.1) for installations in the U.S. or CAN/CSA B149.1 for installations in Canada.

6.2.2 Supply Pressure Requirements

1. Pressure required at the gas valve inlet supply pressure port:
   - Maximum 13"w.c. at flow or no flow conditions to the burner.
   - Minimum 5"w.c. during flow conditions to the burner. Must be verified during start up and with all other gas appliances operating within the building.
2. Install 100% lockup gas pressure regulator in the gas supply line if inlet pressure can exceed 13"w.c at any time. Adjust the lockup pressure regulator for 13"w.c maximum.

⚠ WARNING

DO NOT adjust or attempt to measure gas valve outlet pressure. The gas valve is factory-set for the correct outlet pressure. This setting is suitable for natural gas and propane and requires no field adjustment. Attempts by the installer to adjust or measure the gas valve outlet pressure can result in damage to the valve, causing substantial property damage, serious injury, or death.

NOTICE

The natural gas orifice requirements are:

- *PRESTIGE Solo 80:.....0.185" (4.7 mm)*
- *PRESTIGE Solo 110 ..... 0.242" (6.15 mm)*
- *PRESTIGE Solo 155/175/250 .....None Required*
- *PRESTIGE Solo 299/399.....0.339" (8.6 mm)*

⚠ WARNING

The PRESTIGE Solo is factory equipped with the required natural gas orifice. The natural gas orifice must never be modified or replaced with a different size orifice. Failure to use the required natural gas orifice can result in substantial property damage, serious injury, or death.

Table 1 - Gas Piping Sizing - Natural Gas

Length of Pipe in Feet	Capacity of Schedule 40 Metallic Pipe in Cubic Feet of Natural Gas Per Hour (based on 0.60 specific gravity, 0.30" w.c. pressure drop)				
SCH 40	**1/2"**	**3/4"**	**1"**	**1-1/4"**	**1-1/2"**
10	132	278	520	1050	1600
20	92	190	350	730	1100
30	73	152	285	590	890
40	63	130	245	500	760
50	56	115	215	440	670
75	45	93	175	360	545
100	38	79	150	305	460
150	31	64	120	250	380

6.3. Propane Gas

6.3.1 Pipe Sizing

⚠ WARNING

- **The unit was shipped with a propane conversion kit which is located on the top of the unit in the instructions packet. This kit includes all the necessary parts and instruction to perform the conversion from natural to propane gas. If this conversion kit is missing, please contact Triangle Tube Technical Support for missing kit before installing unit.**
- **Prior to start up, ensure the unit is set to fire propane. Check the rating label for the type of fuel. Check the gas valve for propane conversion label. If there is a conflict or doubt on the burner set up, remove the gas valve and check for the propane orifice, see** *Fig. 16 or Fig. 17 on page 30 or Fig. 18 on page 31*.
- **Failure to ensure proper burner setup can result in substantial property damage, serious injury, or death.**

Contact the local propane gas supplier for recommended sizing of piping, tanks and 100% lockup gas regulator.

6.3.2 Supply Pressure Requirements

1. Adjust the propane supply regulator provided by the gas supplier for 13"w.c. maximum pressure
2. Pressure required at the gas valve inlet supply pressure port:
   - Maximum 13"w.c. at flow or no flow conditions to the burner
   - Minimum 5"w.c. during flow conditions to the burner. Must be verified during start up and with all other gas appliances operating within the building.

⚠ WARNING

DO NOT adjust or attempt to measure gas valve outlet pressure. The gas valve is factory-set for the correct outlet pressure. This setting is suitable for natural gas and propane and requires no field adjustment. Attempts by the installer to adjust or measure the gas valve outlet pressure can result in damage to the valve, causing substantial property damage, serious injury, or death.

NOTICE

The propane orifice requirements are:

- *PRESTIGE Solo 80.....0.142" (3.6 mm)*
- *PRESTIGE Solo 110..... 0.175" (4.45 mm)*
- *PRESTIGE Solo 155..... 0.205" (5.2 mm)*
- *PRESTIGE Solo 175..... 0.232" (5.9 mm)*
- *PRESTIGE Solo 250.....0.250" (6.3 mm)*
- *PRESTIGE Solo 299/399.....0.264" (6.7 mm)*

⚠ WARNING

The propane gas orifice must never be modified or replaced with a different size orifice. Failure to use the required propane gas orifice can result in substantial property damage, serious injury, or death.

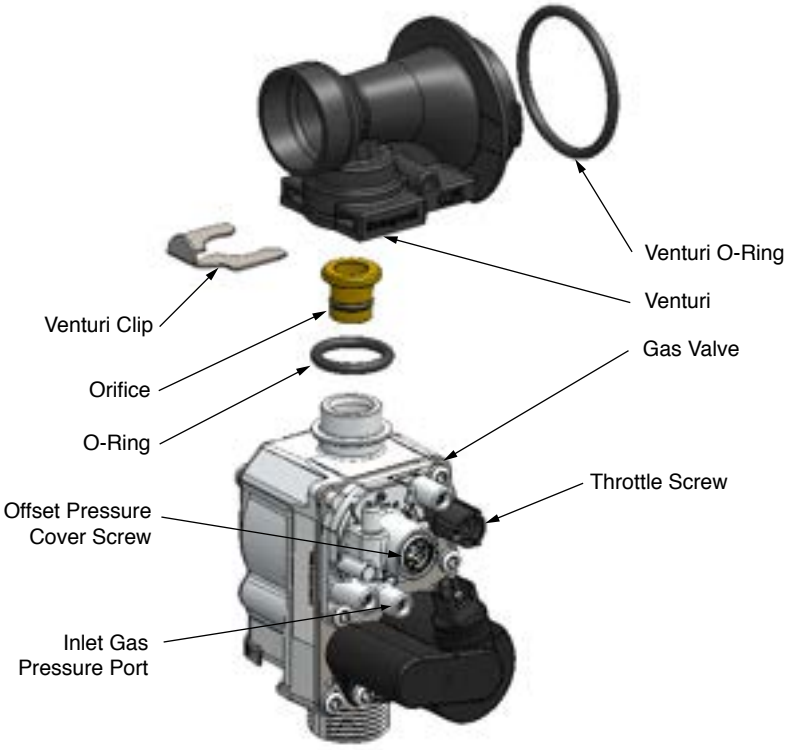

Fig. 16 - Gas Valve / Venturi Assembly - PRESTIGE Solo 80-110

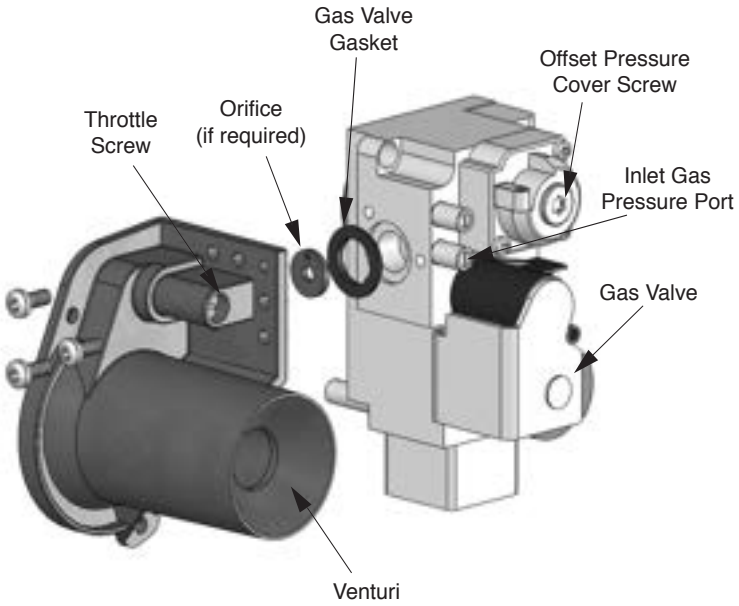

Fig. 17 - Gas Valve / Venturi Assembly - PRESTIGE Solo 155/175/250

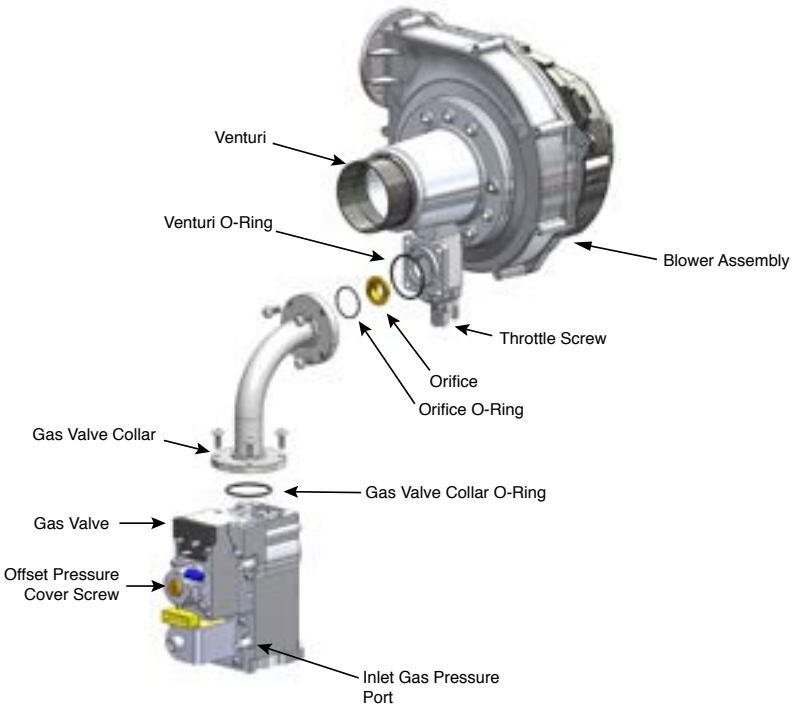

Fig. 18 - Gas Valve / Venturi Assembly - PRESTIGE Solo 299/399

INTENTIONALLY LEFT BLANK

⚠ WARNING

ELECTRICAL SHOCK HAZARD. For your safety, disconnect electrical power supply to the unit before servicing or making any electrical connections to avoid possible electric shock hazard. Failure to do so can cause serious injury, or death.

CAUTION

Prior to servicing, label all wires before disconnecting. Wiring errors can cause improper and dangerous operation. Verify proper wiring and operation after servicing.

7.1. General Requirements

- Wiring must be N.E.C Class 1.
- If original wiring as supplied with the unit must be replaced, use only Type T 194ºF [90ºC] wire or equivalent as a minimum.
- The PRESTIGE Solo must be electrically grounded as required by National Electrical Code (ANSI/NFPA 70) for installations in the U.S., or the Canadian Electrical Code Part 1(CSA C22.1) for installations in Canada.

7.2. Fuse Locations

- The CTRLMax control module contains 3 internal replaceable 5A fuses as shown in *Figure 19 below*.
- The top two fuses protect the PRESTIGE Solo as well as the CH, DHW, and Flame outputs.
- The bottom fuse protects the P3, P4, and Alarm outputs.
- Spare fuses are located on the back of the control module enclosure.

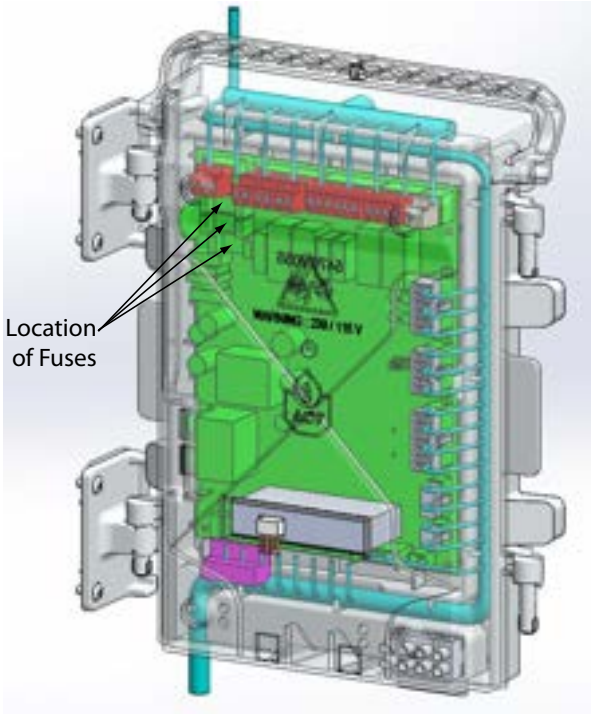

Fig. 19 - CTRLMax Control Module Fuse Location

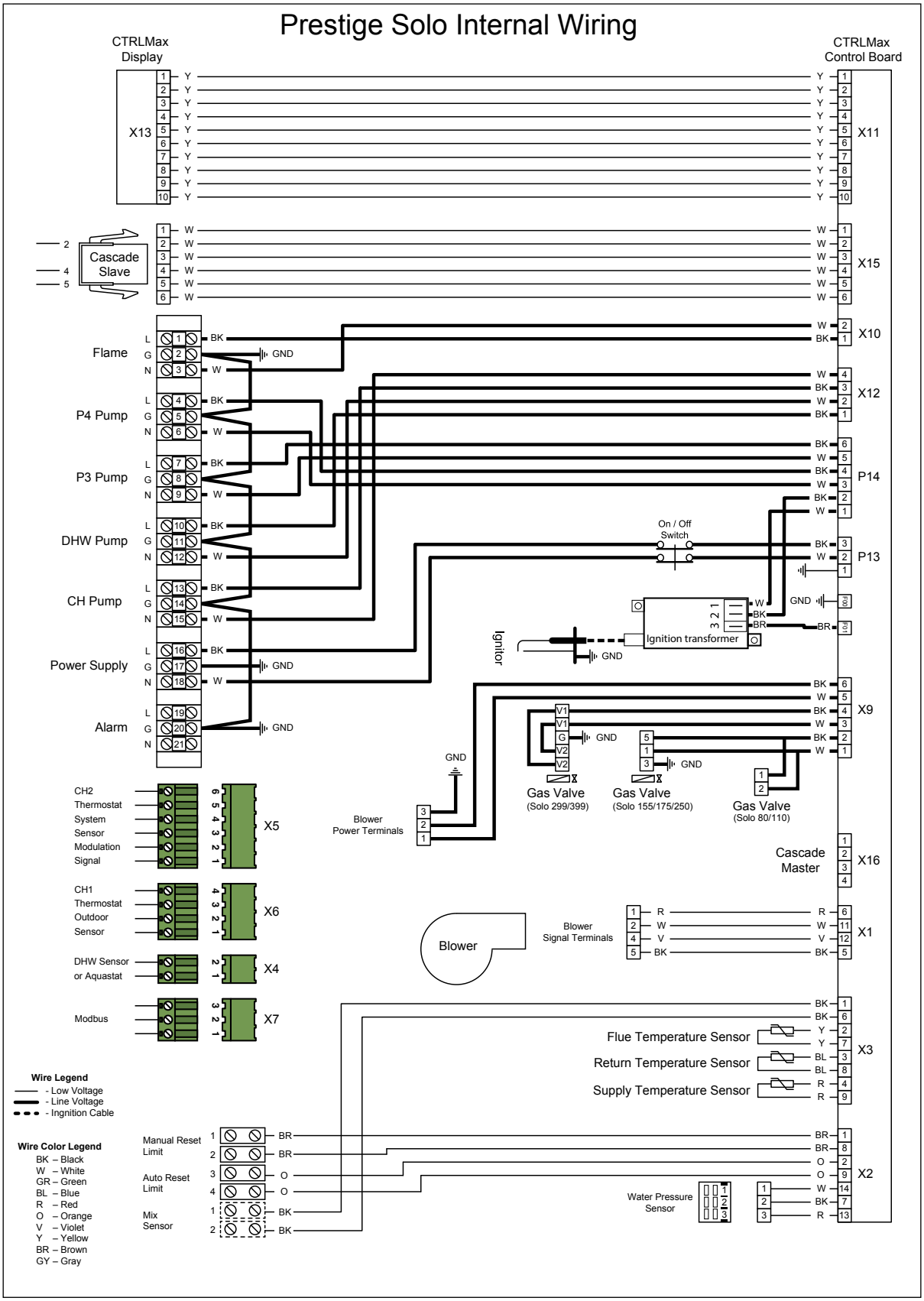

Fig. 20 - Prestige Solo Boiler Factory Wiring

8.1. General Requirements

All field wiring must comply with:

- National Electrical Code (ANSI/NFPA 70) for installations in the U.S., and any other national, state, provincial or local codes or requirements.
- Canadian Electrical Code Part 1 (CSA C22.1) for installations in Canada.

⚠ WARNING

ELECTRICAL SHOCK HAZARD. For your safety, disconnect electrical power supply to the unit before servicing or making any electrical connections to avoid possible electric shock hazard. Failure to do so can cause serious injury, or death.

NOTICE

The low voltage terminals are located at the bottom of the CTRLMax control module. The line voltage terminals are located in the lower right corner as shown in Fig. 21 below.

8.2. Line Voltage Connections

1. Connect a dedicated 120 VAC/15A service to the line voltage terminals located internally in the lower right corner, as shown in ***Fig. 21 below.***
2. Route the incoming 120 VAC power wires through one of the provided openings in the bottom jacket panel.
3. The unit is provided with a service switch located on the front panel, check local code requirements for compliance.

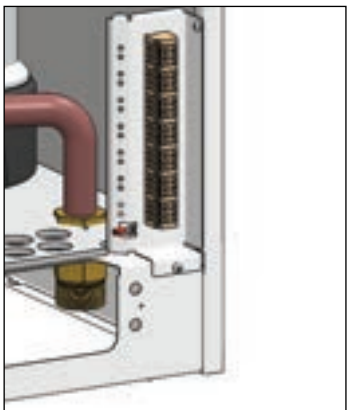

Fig. 21 - Terminal Strip Location

NOTICE

If local electrical codes require an additional service switch, the installer must provide and install a fused disconnect or minimum 15 amp service switch.

8.3. Circulator Wiring

1. The circulator connections used will depend on the systems piping layout. See ***Fig. 9 on page 18 through Fig. 12 on page 21*** for common system piping applications and associated circulator wiring. Consult the CTRLMax Control Supplement for additional options.

NOTICE

The circulator, flame, and ignition transformer outputs are protected by fuses on the CTRLMax control module. The total combined amp draw of the CH, DHW, and Flame outputs must not exceed 4 amps at any time for the Solo 80 through 250, or 3 amps at any time for the Solo 299 & 399. The total combined amp draw of the P3, P4, and ignition transformer outputs must not exceed 5 amps at any time for all Prestige models. Use an isolation relay to lower the total combined amp draw if exceeding this limits.

2. Connect the CH circulator wiring to the line voltage terminals located internally in the lower right corner, as shown in ***Fig. 21 on the left***. This circulator is typically used to supply heat to the central/space heating loop.
3. Connect the DHW circulator wiring to the line voltage terminals located internally in the lower right corner, as shown in ***Fig. 21 on the left***. This circulator is typically used to supply heat to an indirect hot water heater.
4. Connect the P3 circulator wiring to the line voltage terminals located internally in the lower right corner, as shown in ***Fig. 21 on the left***. This circulator is typically used to circulate water through the PRESTIGE Solo in primary/secondary piped systems.
5. Connect the P4 circulator wiring to the line voltage terminals located internally in the lower right corner, as shown in ***Fig. 21 on the left***. This circulator is typically used as a dedicated circulator to a second space heating zone.

8.4. Flame Status & Alarm Wiring

NOTICE

The Flame and Alarm outputs both supply 110VAC when activated. Use an isolation relay to provide dry contacts if required by the external monitoring system.

The Flame output is typically used to provide on/off status to an external monitoring system. The Flame output will provide 0VAC when the PRESTIGE Solo is not fired and 110VAC when the PRESTIGE Solo is fired.

An unused circulator output can be configured in the Installer Menu to provide an alarm output. The Alarm output is typically used to provide lockout status to an external monitoring system. The Alarm output will provide 0VAC when the PRESTIGE Solo is not in a lockout and 110VAC when the PRESTIGE Solo is in a lockout. The types of lockouts which will cause the Alarm output to activate are adjustable in the Installer Menu. Consult the CTRLMax Control Supplement for information on this setting.

1. Connect the external monitoring device to the line voltage terminals located internally in the lower right corner, as shown in *Fig. 21 on page 35*.

NOTICE

The circulator, flame, and ignition transformer outputs are protected by fuses on the CTRLMax control module. The total combined amp draw of the CH, DHW, and Flame outputs must not exceed 4 amps at any time for the Solo 80 through 250, or 3 amps at any time for the Solo 299 & 399. The total combined amp draw of the P3, P4, and ignition transformer outputs must not exceed 5 amps at any time for all Prestige models. Use an isolation relay to lower the total combined amp draw if exceeding these limits..

8.5. Low Voltage Connections

Line and Low Voltage wiring should be separated to prevent possible electrical noise on the low voltage circuits. Line and Low Voltage wiring should use separate electrical knockouts on the PRESTIGE Solo cabinet and should remain separated inside the PRESTIGE Solo.

NOTICE

CH and DHW call connections to the PRESTIGE Solo require a dry contact with no external voltage present. Ensure no external voltage is present on each set of wires before connecting to the PRESTIGE Solo. If external voltage is present, the use of an isolation relay is required to prevent damage to the CTRLMax controller.

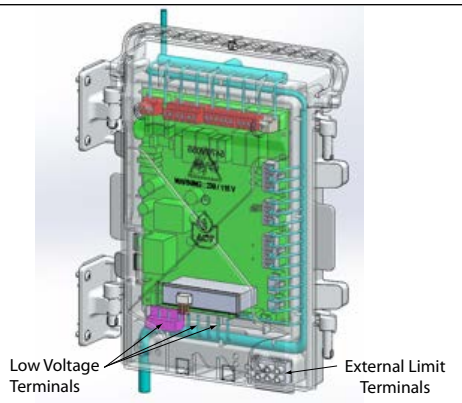

Fig. 22 - Low Voltage Connections

8.6. Thermostat Wiring

The CTRLMax control has two thermostat call inputs for multiple zone / temperature systems. This allows each call to have its own outdoor reset curve and maximizes the efficiency of the system.

NOTICE

Simultaneous CH1 and CH2 calls will result in the PRESTIGE Solo operating at the highest target temperature. The use of a mixing device on the lower temperature zone(s) may be required to protect the lower temperature zone(s) from damage. The CTRLMax control includes a mixing valve function which can operate a mixing valve in a dual temperature system. Consult the CTRLMax Control Supplement for additional information on this function. .

1. Connect the room thermostat or dry contact zone valve end switch wires to low voltage terminals X6-3&4 or X5-5&6 located at the bottom of the CTRLMax control module as shown in *Fig 22 below.*
2. Follow thermostat manufacturer's instructions for proper installation. Thermostat should be located on an inside wall away from any heat or cold influences such as drafts, lights, fireplaces, etc.
3. Set the thermostat anticipator (If applicable) as follows:
   - Set for 0.2 amps when wired directly to the PRESTIGE Solo.
   - Set to match the electrical power requirements of the connected device when wired to zone relays or other devices. Refer to the relay manufacturer's specifications and the thermostat instructions for additional information on anticipator setting.

NOTICE

The use of power stealing thermostats which draw their power from the PRESTIGE Solo can lead to erratic or unpredictable operation.

8.7. Outdoor Sensor Wiring

The Outdoor Reset function and Warm Weather Shutdown (WWSD) features require the connection of the included outdoor temperature sensor. See *Chapter 12 on page 63* for outdoor sensor installation and setup.

8.8. Domestic Hot Water Wiring

The Domestic Hot Water terminals can accept either a call from an aquastat (thermostat) or temperature sensor. Use of the included indirect water heater sensor is recommended.

1. Connect the DHW aquastat or temperature sensor wires to low voltage terminals X4-1&2 located at the bottom of the CTRLMax control module as shown in *Fig. 22 on page 36*.

8.9. Additional Boiler Limits

Additional boiler limits (High Temperature Limit, LWCO, etc.) can be wired into either the Manual Reset Limit or Auto Reset Limit terminals of the PRESTIGE Solo. These limit connections will provide a "hard" lockout requiring a manual reset of the PRESTIGE Solo or a "soft" lockout in which the PRESTIGE Solo will automatically reset when the limit resets.

A Manual Reset External Limit Open (E87) lockout will occur anytime the manual reset terminals are open. An Auto Reset External Limit Open (76) lockout will not occur until just before ignition when the auto reset terminals are open. The Auto Reset terminals should be used for any type of burner interlock such as a combustion air louver or water flow proving switch.

NOTICE

- *The Manual Reset Limit and Auto Reset Limit terminals are located on the lower right corner of the CTRLMax control module housing.*
- *Manual Reset Limit and Auto Reset Limit connections to the PRESTIGE Solo require a dry contact with no external voltage present. Ensure no external voltage is present on each set of wires before connecting to the PRESTIGE Solo. If external voltage is present, the use of an isolation relay is required to prevent damage to the CTRLMax controller.*

1. Remove the factory-installed brown jumper wire at the Manual Reset Limit terminals that will accept the additional boiler limit.
2. Remove the factory-installed orange jumper wire at the Auto Reset Limit terminals that will accept the additional boiler limit.
3. Connect the external limit wires to the Manual Reset Limit or Auto Reset Limit low voltage terminals located on the lower right corner of the CTRLMax control module housing as shown in *Fig. 22 on page 36.*

8.10. External Modulation Control

The PRESTIGE Solo firing rate can be controlled by an external modulating boiler controller. See *Chapter 13 on page 65* for external modulation signal wiring and setup.

8.11. System Sensor Wiring

An optional system temperature sensor can be placed on the central heating loop to control the temperature in the central heating loop instead of the boiler loop. When connected, the PRESTIGE Solo will automatically modulate to maintain the target temperature in the central heating loop. The boiler supply temperature sensor will continue to be used as a high temperature limit.

CAUTION

Locate the system temperature sensor where it can accurately measure the supply temperature to the heating system. Inaccurate system temperature readings could lead to overheating or under heating resulting in property damage.

1. Connect the system temperature sensor wires to low voltage terminals X5-3&4 located at the bottom of the CTRLMax control module as shown in *Fig. 22 on page 36.*

8.12. Cascade Wiring

The CTRLMax control includes the ability to operate up to six boilers together as one without the need for external controllers. Consult the CTRLMax Control Supplement for more information.

8.13. Modbus Wiring

The CTRLMax control includes the ability to communicate with building management systems (BMS) through a Modbus interface. Consult the CTRLMax Control Supplement for more information.

Modbus communication will only occur if the external device is properly wired to the PRESTIGE Solo as follows:

X7-1 = RS-485 –

X7-2 = RS-485 Ground

X7-3 = RS-485 +

NOTICE

Triangle Tube has building management system (BMS) gateways available to convert Modbus to most BMS protocols including BACnet® MS/TP, BACnet® /IP, Metasys® N2, and LonWorks®. Contact Triangle Tube for more information

PRESET PUMP CONFIGURATION 3

Heat Call	Pump 4	Pump 3	DHW Pump	CH Pump
CH1	OFF	ON	OFF	ON
CH2	OFF	ON	OFF	ON
DHW	OFF	OFF	ON	OFF

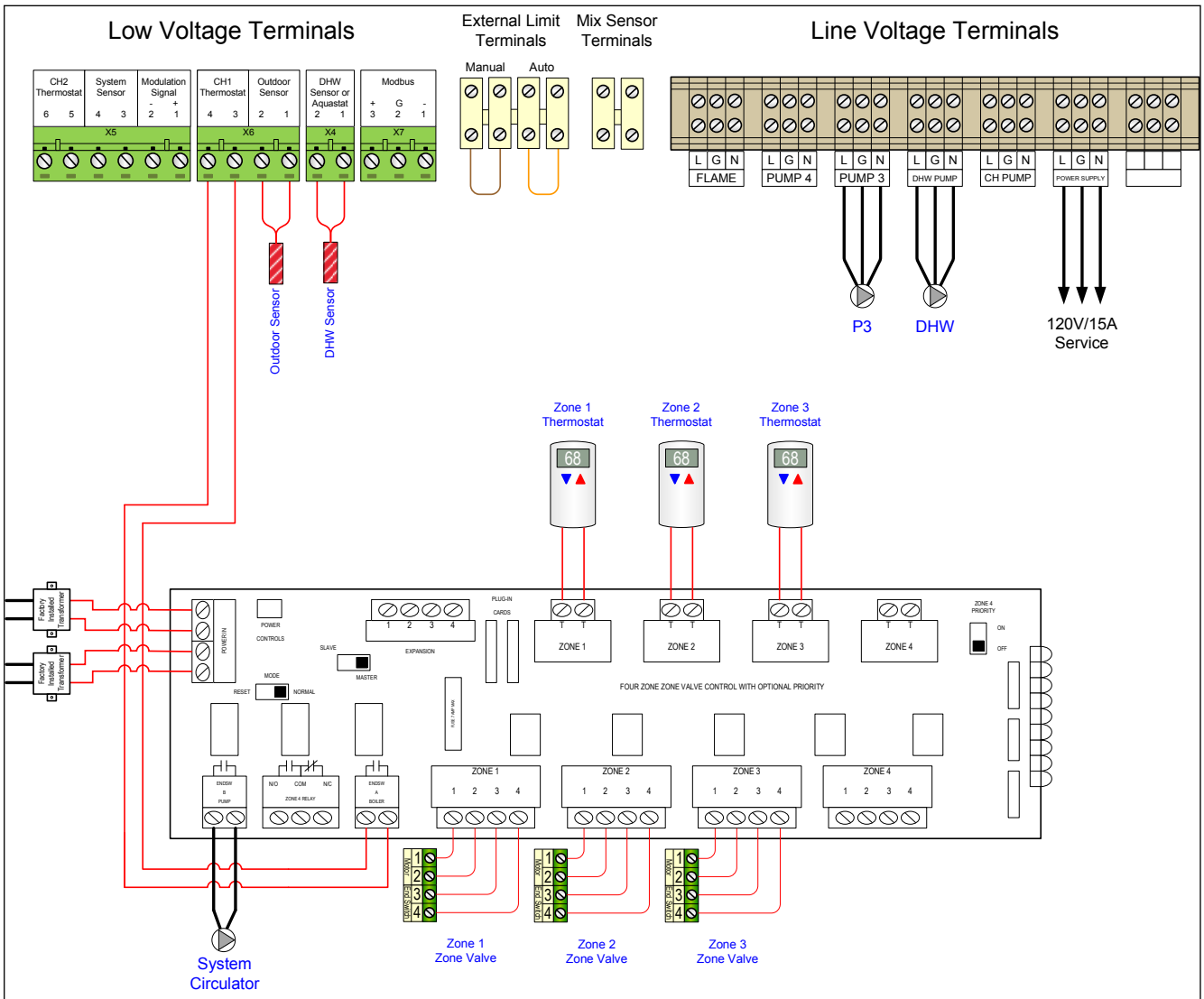

Fig. 23 - Typical Zone Panel Wiring to PRESTIGE with Zone Valves

PRESET PUMP CONFIGURATION 4

Heat Call	Pump 4	Pump 3	DHW Pump	CH Pump
CH1	OFF	ON	OFF	ON
CH2	ON	ON	OFF	OFF
DHW	OFF	OFF	ON	OFF

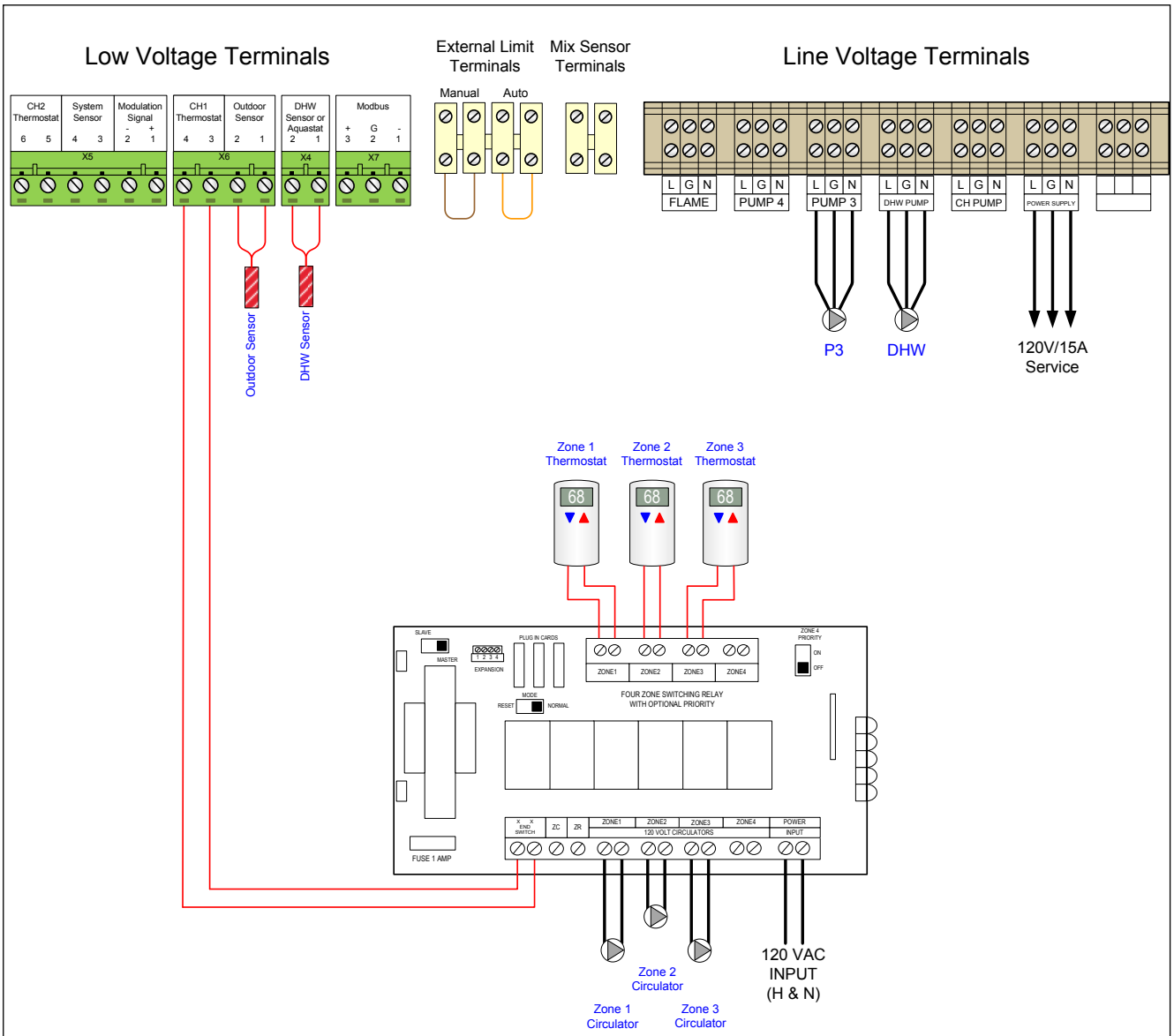

Fig. 24 - Typical Zone Panel Wiring to PRESTIGE with Zone Circulators

INTENTIONALLY LEFT BLANK

The ControlMax (CTRLMax) Boiler Management System is designed to be flexible yet easy to use. CTRLMax monitors and controls the PRESTIGE Solo to provide heat as efficiently as possible. CTRLMax includes many advanced features:

- Two central/space heating (CH) call inputs with separate outdoor reset curves.
- Domestic Hot Water (DHW) call input with optional priority.
- EZ Setup feature allows the installer to quickly customize CTRLMax for each installation.
- Mixing valve control to simultaneously heat dual temperature heating systems.
- Cascade function allows up to six PRESTIGE Solo boilers to operate together in a single heating system.
- Modbus interface for integrating with building management systems.

All CTRLMax features are easy to use through a graphical display where information is presented either graphically or in plain English, so code charts are not required. *Fig. 25* shows an CTRLMax display example of the PRESTIGE Solo fired for a domestic hot water demand.

9.1. CTRLMax Navigation

Navigation is performed through four arrow buttons **UP, DOWN, LEFT, RIGHT** with a center **OK** button for making selections and entering information.

The **INSTALLER** button (the small round button) provides the installing contractor with full access to all available features after entering a password. Reference the CTRLMax Control Supplement for Installer level functions

The Main Menu can be entered from the Home Screen by pressing the **OK** button.

The menu system utilizes icons to represent each selection. The current selected menu is displayed as a reversed image with a text description shown at the top of the display. Menus can be entered by highlighting the desired icon and pressing the **OK** button.

The Home Screen icon at the bottom of each screen returns to the Home Screen when selected. The Previous Screen icon at the bottom of each screen returns to the previous screen when selected.

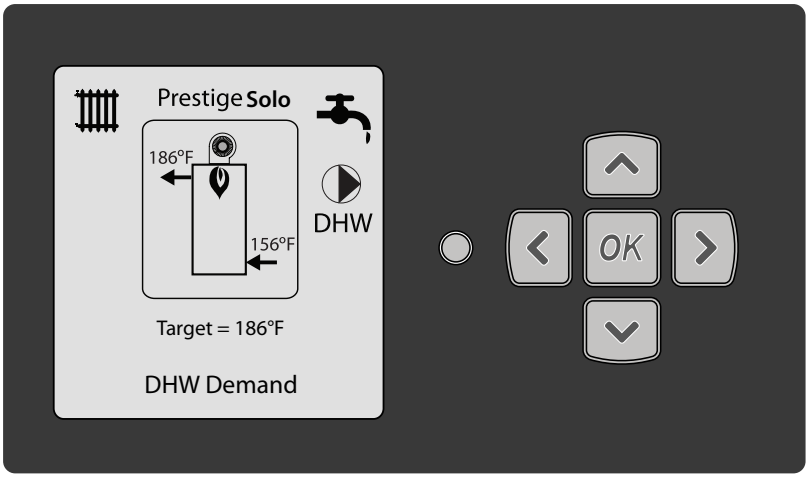

Fig. 25 - CTRLMax User Interface

9.2. CTRLMax Menu Structure

Home Screen

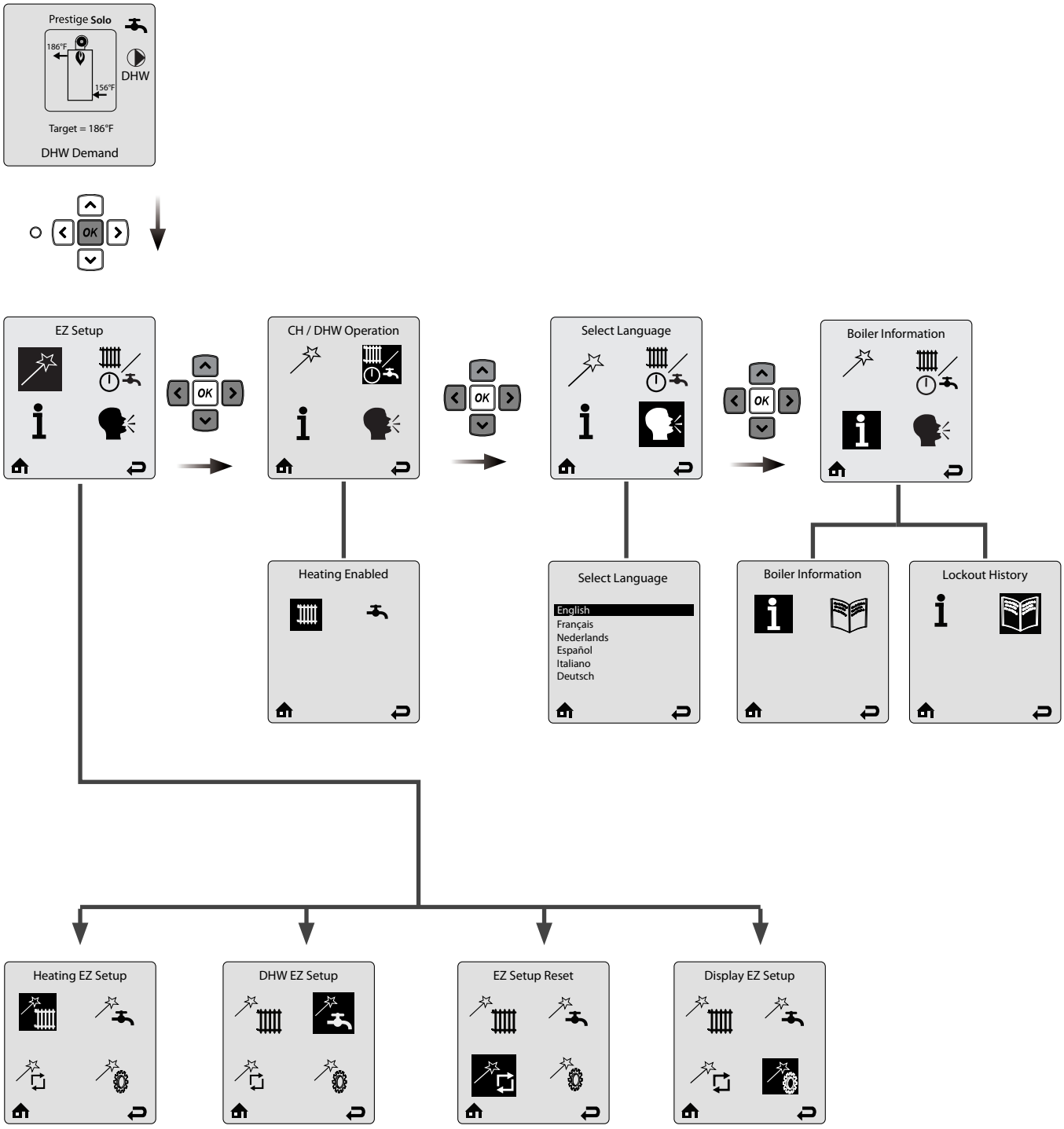

9.3. Home Screen

The Home Screen presents status information in a very user friendly way so that the current state of the boiler can be quickly accessed.

- **Screen backlight** - it will illuminate when any button is depressed, and remain illuminated for five minutes.
- **Screen contrast** - it can be adjusted at the Home screen by pressing and holding the **OK** button, then pressing and holding the **LEFT** button along with the **OK** button. Press the **UP** and **DOWN** button to increase or decrease the contrast while holding the **OK** and **LEFT** buttons depressed. All buttons must be released and the procedure performed again to switch between increasing and decreasing contrast.

Main Icons of CTRLMax display

- Central Heating - indicates information related to central/space heating.
- DHW - indicates information related to Domestic Hot Water.
- Home - to go back to the home screen.
- Back - to go back to the previous screen.
- Warm Weather Shutdown - displays on the home screen when the outdoor temperature reaches the Warm Weather Shutdown temperature.
- Reset - to reset the system to the factory settings.
- Settings - to access controller settings (language, units, etc.).
- Easy Setup - to quickly adjust the most common settings.
- CH/DHW operation - to enable/disable the central/space heating or Domestic Hot Water functions
- Information - to get information on the boiler.

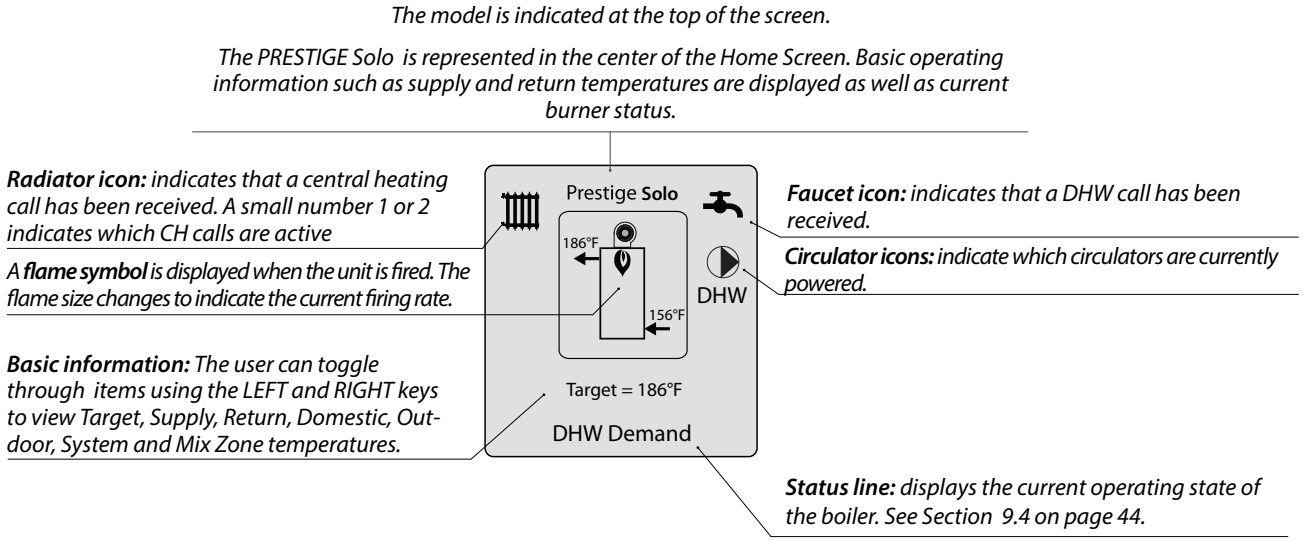

9.4. Status Line Messages

Standby - Indicates that the Prestige is ready to respond when a demand is received.

CH Demand - A central heating call has been received.

DHW Demand - A domestic hot water call has been received.

CH/DHW Demand - Central heating and domestic hot water calls are being received simultaneously. Both calls are being satisfied simultaneously because domestic hot water priority has been disabled.

DHW Priority - Central heating and domestic hot water calls are being received simultaneously. Domestic hot water call is being satisfied first because it has priority over central heating calls.

Priority Timeout - Central heating and domestic hot water calls are being received simultaneously. The domestic hot water priority time limit has been exceeded. Priority will now switch back and forth between central heating and domestic hot water calls until one call is satisfied.

External Demand - An external modulation call has been received.

Slave Operation - The Prestige is a slave in a cascade system.

Manual Operation - The burner or circulators have manually been enabled in the Installer Menu.

CH Burner Delay - The burner will not fire until the call blocking time has elapsed.

DHW Burner Delay - The burner will not fire until the call blocking time has elapsed.

CH Setpoint Reached - The burner is not fired because the supply/system water temperature exceeds the setpoint. The central heating circulator(s) continue(s) to operate and the burner will fire again once the supply/system water temperature drops below the setpoint.

DHW Setpoint Reached - The burner is not fired because the supply/system water temperature exceeds the setpoint. The domestic circulator(s) continue(s) to operate and the burner will fire again once the supply/system water temperature drops below the setpoint.

CH Post Pump - The central heating circulator(s) is/are running to remove heat from the Prestige at the completion of a call.

DHW Post Pump - The domestic hot water circulator(s) is/are running to remove heat from the Prestige at the completion of a call.

Freeze Protection - The burner is fired because the freeze protection feature has been activated. Freeze protection will end once the supply/system water temperature is raised to 60°F [16°C].

Boiler Protection - The burner firing rate is being reduced because of an excessive difference between the boiler supply and return temperatures. The firing rate will begin increasing once the temperature difference is less than 45°F [25°C].

Low Water Pressure - The system pressure has dropped to 10.1 psi. The Prestige will still respond to calls until the pressure drops below 7.2 psi. Increase system pressure to 14.5 psi to clear Low Water Pressure warning

Lockout Description - The lockout which currently has the Prestige shut down is displayed

9.5. Main Menu

The Main Menu can be entered from the Home Screen by pressing the **OK** button.

The menu system utilizes icons to represent each selection.

The currently selected menu is displayed as an inversed image with a text description shown at the top of the display.

Menus can be entered by highlighting the desired icon and pressing the **OK** button.

9.6. EZ Setup

The EZ Setup menus provide a simple way to quickly customize CTRLMax for each installation. EZ Setup prompts the user to make selections which allows the PRESTIGE Solo to be setup very quickly without searching through long lists of settings and manually making adjustments.

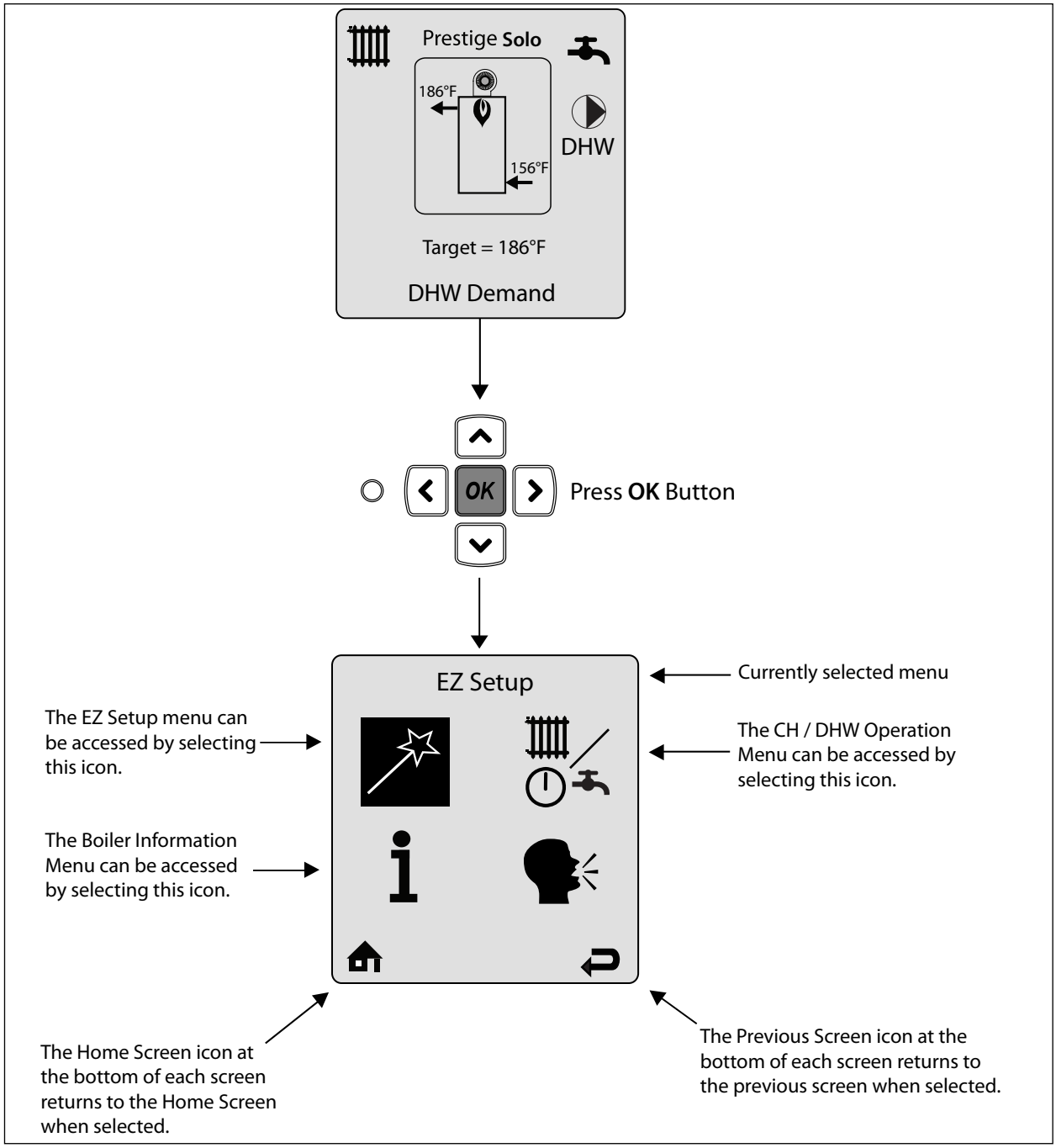

9.7. Heating EZ Setup

Heating EZ Setup allows the installer to quickly customize the central heating settings for the application.

9.7.1 Select CH Demand (No outdoor sensor connected)

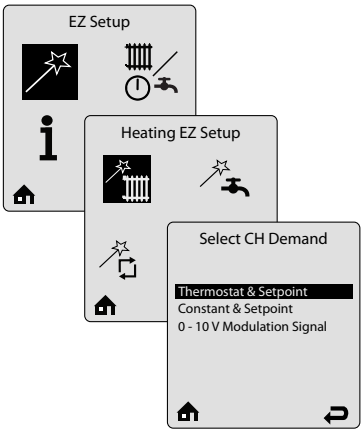

Select CH Demand prompts the installer to select how a CH Demand is generated.
Thermostat & Setpoint - A central heating call from a thermostat or zone panel will enable the Prestige and the setpoint will be fixed for central heating calls. After Thermostat & Setpoint is selected, the **CH1 Setpoint** screen appears. (see below).

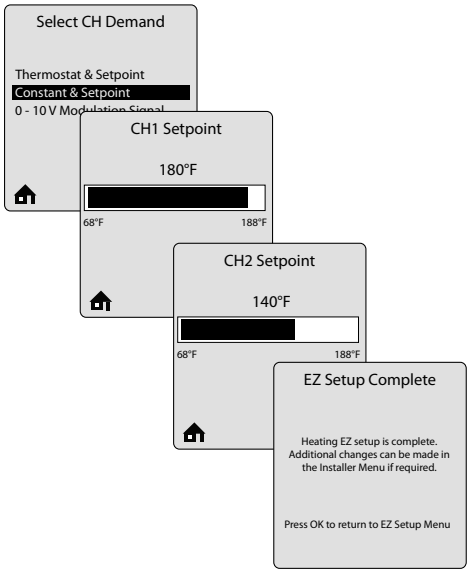

Constant & Setpoint - The Prestige will maintain setpoint without an external CH call from a thermostat or zone panel. The setpoint will be fixed for CH calls. After Constant & Setpoint is selected, the CH1 Setpoint screen appears.

CH1 Setpoint prompts to enter the fixed setpoint for a CH1 heating call when a Setpoint option is chosen in Select CH Demand.

Press the **LEFT** or **RIGHT** buttons to adjust the temperature setpoint then press **OK** to store the setting. The **CH2 Setpoint** screen then appears.

CH2 Setpoint prompts to enter the fixed setpoint for a CH2 heating call when a Setpoint option is chosen in Select CH Demand.

Press the **LEFT** or **RIGHT** buttons to adjust the temperature setpoint then press **OK** to store the setting and complete the Heating EZ Setup.

CH1 Default: 180°F [82°C]
CH2 Default: 140°F [60°C]

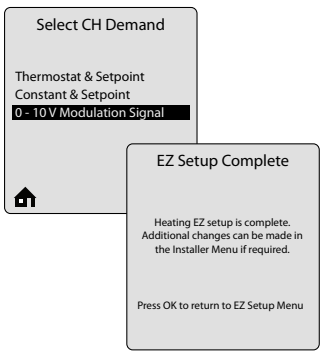

0 - 10V Modulation Signal - This option allows the Prestige firing rate to be controlled by an external control system.

Refer to *Chapter 13 on page 65* for more information.

9.7.2 Select CH Demand (Outdoor sensor connected)

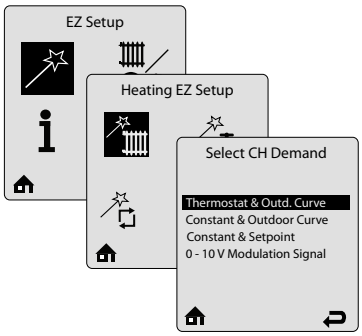

Select CH Demand prompts the installer to select how a CH Demand is generated.

Thermostat & Outd. Curve – A central heating call from a thermostat or zone panel will enable the Prestige and the setpoint will vary with the outdoor temperature for central heating calls. After Thermostat & Outd. Curve is selected, the **Select CH1 Reset Curve** screen appears (see below).

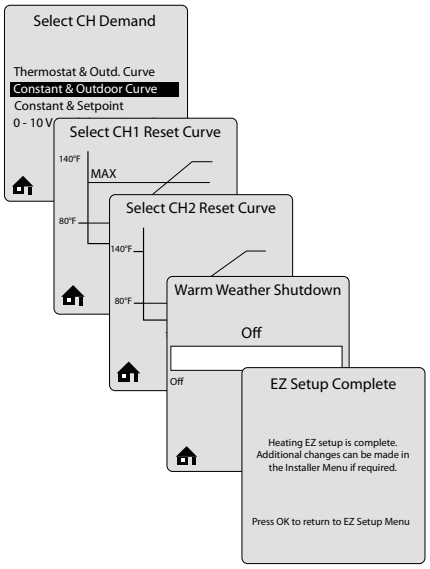

Constant & Outdoor Curve - The Prestige will maintain setpoint without an external CH call from a thermostat or zone panel. The setpoint will vary with the outdoor temperature for central heating calls. After Constant & Outdoor Curve is selected, the **Select CH1 Reset Curve** screen appears

Select CH1 Reset Curve prompts to select an outdoor reset curve for a CH1 heating call when an Outdoor Curve option is chosen in Select CH Demand. Outdoor reset curve presets are available to cover most applications. The outdoor reset curve can also be adjusted to any desired settings in the Installer Menu.

Press the **UP** or **DOWN** buttons to select the outdoor reset curve appropriate for the type of heating system, then press **OK** to store the setting. The **Select CH2 Reset Curve** screen then appears.

Default: Radiators 2

Select CH2 Reset Curve prompts to select an outdoor reset curve for a CH2 heating call when an Outdoor Curve option is chosen in Select CH Demand. Outdoor reset curve presets are available to cover most applications. The outdoor reset curve can also be adjusted to any desired settings in the Installer Menu.

Press the **UP** or **DOWN** buttons to select the outdoor reset curve appropriate for the type of heating system, then press **OK** to store the setting. The **Warm Weather Shutdown** screen then appears.

Default: Radiators 2

Table 2 - Outdoor Reset Preset Selections

Preset	Minimum Setpoint	Maximum Setpoint
Floor Heat Low Temp.	76°F [24°C]	96°F [35°C]
Floor Heat High Temp.	76°F [24°C]	104°F [40°C]
Radiators 1	80°F [27°C]	120°F [49°C]
Radiators 2	80°F [27°C]	140°F [60°C]
Radiators 3	80°F [27°C]	158°F [70°C]
Radiators 4	80°F [27°C]	176°F [80°C]
Radiators 5	80°F [27°C]	188°F [87°C]
Cast iron baseboard	100°F [38°C]	170°F [77°C]
Finned tube baseboard	120°F [49°C]	180°F [82°C]
Radiators 6	120°F [49°C]	170°F [77°C]
Fancoil	140°F [60°C]	180°F [82°C]

Warm Weather Shutdown prompts to enter an optional outdoor temperature at which to disable the central heating function and any circulator placed into constant circulation with the Pump Permanent Circulation setting. The Prestige will continue to respond to a domestic hot water call or a 0- 10V Modulation Signal when the outdoor temperature exceeds the Warm Weather Shutdown Temperature setting.

Press the **LEFT** or **RIGHT** buttons to adjust the Warm Weather Shutdown Temperature then press the **OK** button to store the setting and complete Heating EZ Setup.

The Warm Weather Shutdown icon ( ) is displayed on the home screen when the outdoor temperature reaches the Warm Weather Shutdown temperature.

Default: OFF.

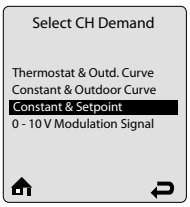

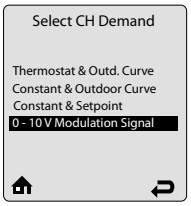

Constant & Setpoint - See *section 9.7.1 on page 46*.

0 - 10V Modulation Signal - See *section 9.7.1 on page 46*.

9.8. Domestic Hot Water EZ Setup

Domestic Hot Water EZ Setup allows the installer to quickly customize the Domestic Hot Water settings for the application

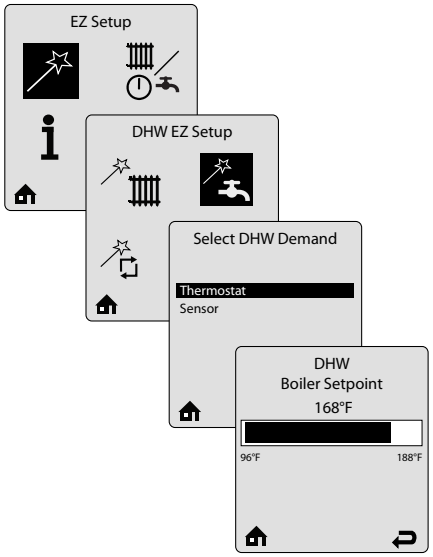

Select DHW Demand prompts the installer to select how a DHW Demand is generated.

When **Thermostat** is selected in Select DHW Demand, a domestic hot water call from an aquastat or dry contact switch will enable the Prestige with a fixed setpoint for a domestic hot water call. After Thermostat is selected, the **DHW Boiler Setpoint** screen appears.

Default: Thermostat

DHW Boiler Setpoint prompts to enter the fixed boiler setpoint temperature during a domestic hot water call.

Press the **LEFT** or **RIGHT** buttons to adjust the temperature setpoint then press **OK** to store the setting. The **DHW Priority Timeout** screen then appears (see below).

Default: 168°F [75°C].

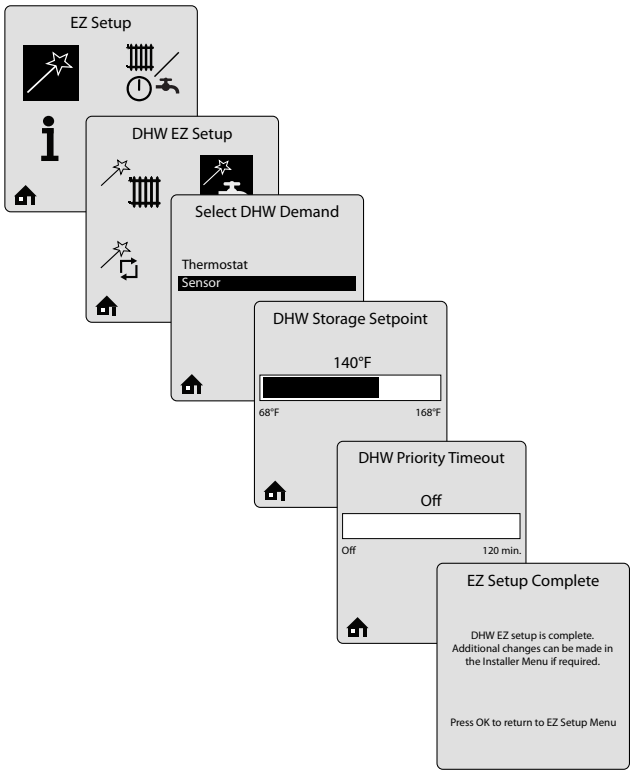

When **Sensor** is selected in Select DHW Demand, use of an optional Indirect Water Heater Sensor is required. The Prestige monitors the DHW storage temperature and generates a DHW call whenever the temperature drops below the DHW storage setpoint by 6°F [3°C].

DHW Storage Setpoint prompts to enter the DHW Storage Setpoint temperature.

Press the **LEFT** or **RIGHT** buttons to adjust the temperature setpoint then press **OK** to store the setting. The **DHW Priority Timeout** screen then appears.

Default: 140°F [60°C].

NOTICE

The DHW Boiler Setpoint will automatically be set 28°F [15°C] higher than the DHW Storage Setpoint setting

DHW Priority Timeout prompts to enter an optional time limit that a domestic hot water call has priority over central heating call.

Press the **LEFT** or **RIGHT** buttons to adjust the timeout value, if required, then press **OK** to store the setting and complete the DHW EZ Setup.

Default: Off

9.9. EZ Setup Reset

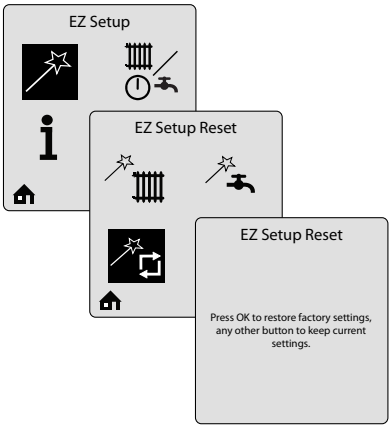

EZ Setup Reset allows reset of all EZ Setup settings back to the original factory defaults. See *Chapter 13 on page 65* for the list of settings reset by this function.
Follow the on-screen instructions to reset all EZ Setup settings.

9.10. Display EZ Setup

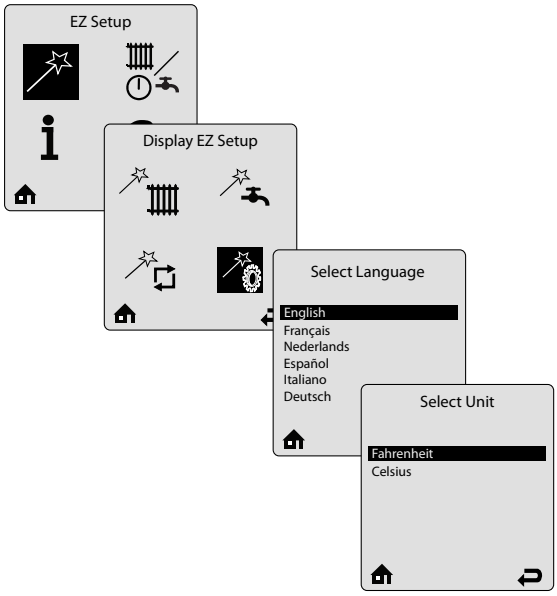

Display EZ Setup allows language (Nine different languages: English, French, Dutch, Spanish, Italian, German, Czech, Polish and Russian) and temperature units selection.

Press the **UP** or **DOWN** buttons to select the required language then press **OK** to store the setting. The **Select Unit** screen then appears.

Press the **UP** or **DOWN** buttons to select the required temperature units then press **OK** to store the setting.

9.11. CH/DHW Operation

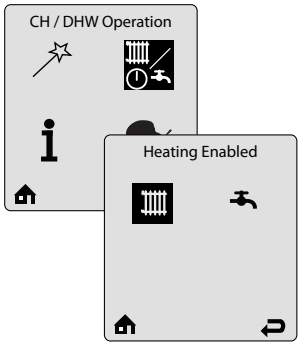

CH/DHW Operation provides a simple way to enable/disable either the CH or the DHW function of the Prestige.

Press the **LEFT** or **RIGHT** buttons to select the CH or DHW icon, then press **OK** to toggle between the enabled/disabled status. The status is displayed at the top of the screen.

Using the arrow keys, select the **HOME** or **RETURN** icon at the bottom of the screen to go back either to the home page or to the previous screen.

Default :

9.12. Boiler Information

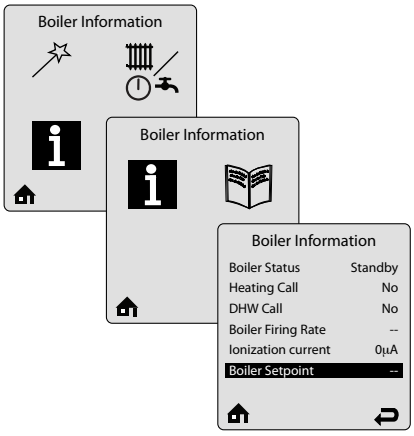

Boiler Information provides real time operating information of the Prestige. Each line contains an information item followed by its current value. Six lines are displayed on the screen at one time.

Some information items include a logging function which records one sample every 12 minutes to produce a graph of the last 24 hours. Select the information item in Boiler Information then press the **OK** button to view its graph. The following items have a logging function:

- Boiler Firing Rate
- Ionization Current
- Boiler Setpoint
- Boiler Supply Temperature
- Boiler Return Temperature
- Boiler Flue Temperature
- Outdoor Temperature
- DHW Storage Temperature
- External Modulation Signal
- Pressure

Press the **UP** or **DOWN** buttons to scroll through the items.

9.12.1 Information Items

Information Item	Description
Boiler Status	Displays the current operating state of the Prestige. This is the same as the status line on the home screen.
Heating Call	Displays if a central heating call is present.
DHW Call	Displays if a domestic hot water call is present.
Boiler Firing Rate	Displays the current firing rate of the Prestige.
Ionization Current	Displays the current flame ionization current from the ignitor.
Boiler Setpoint	Displays the current setpoint of the Prestige.
Supply Temp.	Displays the current supply temperature of the Prestige.
Return Temp.	Displays the current return temperature to the Prestige.
Boiler Flue Temp.	Displays the current flue temperature of the Prestige.
Outdoor Temp.	Displays the current outdoor temperature.
DHW Storage Temp.	Displays the current DHW storage temperature when Indirect Water Heater Sensor PSRKIT22 is installed.
External Modulation Signal	Displays the current external modulation signal being received from an external controller.
Pressure	Displays the current system water pressure.
CH Ignitions	Displays the number of central heating ignitions since the unit was installed. This counter increases in increments of twenty.
CH Runtime	Displays the number of hours the Prestige has run for a central heating call since the unit was installed.
DHW Ignitions	Displays the number of domestic hot water ignitions since the unit was installed. This counter increases in increments of twenty.
DHW Runtime	Displays the number of hours the Prestige has run for a domestic hot water call since the unit was installed.
Mix Zone Temperature	Displays the current low temperature mix zone temperature.

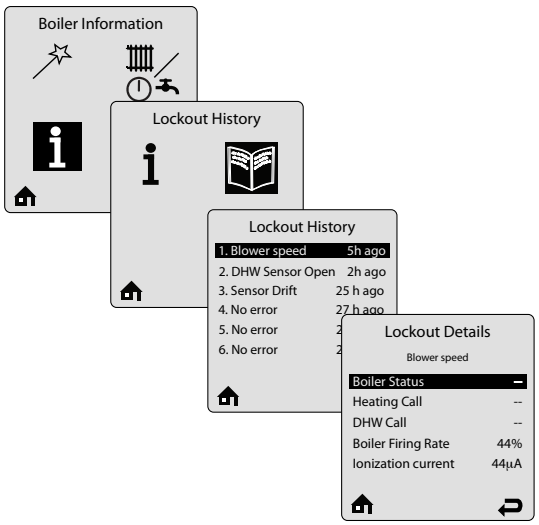

Lockout History records the last eight lockouts. Six lines are displayed on the Lockout History screen at one time. Each line contains a lockout description followed by how long ago the lockout occurred.

Press the **UP** or **DOWN** buttons to scroll through the items then press **OK** to select and get more details through the **Lockout Details** screen. The following information items are recorded at the time of a lockout:

- Boiler Status
- Heating Call
- Domestic Call
- Boiler Firing Rate
- Flame Ionization Current
- Boiler Setpoint
- Boiler Supply Temperature
- Boiler Return Temperature
- Boiler Flue Temperature
- Outdoor Temperature
- System Temperature

9.12.2 Lockout Screen

If a problem occurs, the Lockout Screen replaces the Home Screen. The backlight will remain on until the lockout is reset.

Pressing any arrow button will return to the Home Screen so that additional troubleshooting can be performed. See *Sections 9.12.3 on page 53 and 9.12.4 on page 54* for a list of lockouts and descriptions.

Select the Home Screen icon at the bottom of any screen to return to the lockout screen.

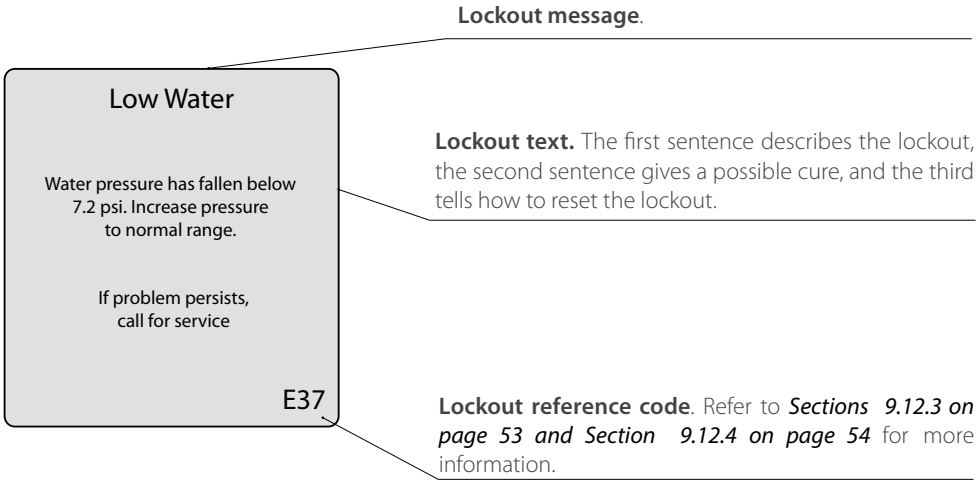

9.12.3 Manual Reset Lockouts

Code	Lockout Message	Description
E1	Failed Ignition	The burner failed to light after 5 ignition attempts.
E2	False Flame	Flame detected prior to ignition.
E3	High Boiler Temperature	Boiler temperature has reached 210°F [99°C] or 102°F [39°C].
E5	Blower Speed	Blower is not at correct speed or speed signal is not being received by control module.
E8	Flame Circuit Error	Flame circuit test failed.
E9	Gas Valve Circuit Error	Gas valve circuit test failed.
E13	Reset Limit Reached	Resets are limited to 5 every 15 minutes.
E15	Sensor Drift	Supply or return sensor reading has drifted.
E16	Supply Sensor Stuck	Supply sensor reading is not changing.
E17	Return Sensor Stuck	Return sensor reading is not changing.
E18	Sensor Failure	Supply or return sensor reading changed very rapidly.
E19	Flame Failure During Startup Phase	Flame lost after startup
E21	Internal Control Fault	A / D conversion error.
E30	Supply Sensor Shorted	A short circuit has been detected in the boiler supply temperature sensor circuit.
E31	Supply Sensor Open	An open circuit has been detected in the boiler supply temperature sensor circuit.
E43	Return Sensor Shorted	A short circuit has been detected in the boiler return temperature sensor circuit.
E44	Return Sensor Open	An open circuit has been detected in the boiler return temperature sensor circuit.
E47	Water Pressure Sensor Error	Water pressure sensor is disconnected or broken.
E80	Return > Supply	Return temperature is higher than supply temperature.
E83	Delta T Protection	Excessive difference between boiler supply and return temperatures has occured 5 times
E84	High Flue Temperature	Flue temperature has exceeded high limit 5 times
E87	External Limit Open	An external manual reset limit has opened

9.12.4 Automatic Reset Blocking Lockouts

Code	Lockout Message	Description
E7	High Flue Temperature	Flue temperature exceeds high limit.
E12	Internal Control Fault	EEPROM misconfiguration.
E25	Internal Control Fault	CRC check error.
E32	DHW Sensor Shorted	A short circuit has been detected in the DHW temperature sensor circuit.
E33	DHW Sensor Open	An open circuit has been detected in the DHW temperature sensor circuit.
E34	Low Voltage	Line voltage has fallen below an acceptable operating level.
E37	Low Water	Water pressure has fallen below 7.2 psi.
E45	Flue Sensor Shorted	A short circuit has been detected in the boiler flue temperature sensor circuit.
E46	Flue Sensor Open	An open circuit has been detected in the boiler flue temperature sensor circuit.
E76	External Limit Open	An external automatic reset boiler limit has opened.
E77	High Mix Circuit Temperature	Mix circuit temperature exceeds Mix zone high limit setting.
E78	Mix Circuit Sensor Shorted	A short circuit has been detected in the mix circuit temperature sensor circuit.
E79	Mix Circuit Sensor Open	An open circuit has been detected in the mix circuit temperature sensor circuit.
E81	Sensor Drift	Supply and return temperatures are not equal.
E82	Delta T Protection	Excessive difference between the boiler supply and return temperatures.
E89	Incorrect Setting	A parameter setting is in conflict with another setting.
E90	Firmware Mismatch	Control module and display firmware versions are incompatible.
E91	System Sensor Shorted	A short circuit has been detected in the system temperature sensor circuit.
E92	System Sensor Open	An open circuit has been detected in the system temperature sensor circuit.
E93	Outdoor Sensor Shorted	A short circuit has been detected in the outdoor temperature sensor circuit.
E94	Internal Display Fault	Display memory error.
E95	Supply Sensor Error	Supply sensor reading is invalid.
E96	Outdoor Sensor Open	An open circuit has been detected in the outdoor temperature sensor circuit.
E97	Cascade Mismatch	Cascade configuration has changed.
E98	Cascade Bus Error	Communication with other boilers has been lost.
E99	Controller Bus Error	Communication between boiler display and control module has been lost.

CHAPTER 10 - START-UP PREPARATION

NOTICE

Requirements below must be met for warranty coverage of Prestige Solo heat exchangers. A thorough cleaning of any existing system, using approved heating system cleaning agents is required prior to installation of the Prestige Solo boiler. System should be treated with an approved inhibitor after filling for long term protection.

10.1. Boiler System Fluid Requirements

⚠ WARNING

Do not use petroleum-based cleaning or sealing compounds in the boiler system. Damage to seals and gaskets in the system components can occur, resulting in substantial property damage, serious injury, or death.

NOTICE

System fluid including additives, must be practically non-toxic, having a toxicity rating or Class of 1, as listed in Clinical Toxicology of Commercial Products.

10.1.1 Boiler Fluid pH Level 6.0 to 8.0

Maintain the boiler fluid pH between 6.0 and 8.0. Check using litmus paper or contact a water treatment company for a chemical analysis.

If the pH does not meet this requirement, do not operate the PRESTIGE Solo or leave the unit filled until the condition is corrected.

10.1.2 Boiler Fluid Hardness Less Than 7 Grains

For areas with unusually hard water (hardness above 7 grains) consult a water treatment company.

10.1.3 Chlorinated Water

Do not use the PRESTIGE Solo to heat a swimming pool or spa directly.

Maintain the chlorine level of the water at levels considered safe for drinking.

10.1.4 Flush Boiler to Remove Sediment

The installer must flush the boiler system to remove any sediment to allow proper operation of the PRESTIGE Solo .

Flush the system until the water runs clean and is free of sediment.

For zoned systems, each zone should be flushed through a purge valve. Purge valves and isolation valves should be installed on each zone to allow proper flushing of the system.

10.1.5 Cleaning of Old Boiler/System:

- Drain the existing system.
- Fill system with fresh water and cleaner, place existing boiler in operation and run all zones.
- Follow manufacturer's instructions for proper cleaner concentration and proper cleaning time.
- Thoroughly drain and flush system with fresh water after cleaning.
- Install new boiler and fill system with fresh water and proper amount of inhibitor.
- Verify pH and inhibitor level per inhibitor manufacturer's specs; add inhibitor if necessary.

10.1.6 Cleaning of New Boiler/System:

- Install new boiler and flush system with clean water to remove any debris.
- Fill system with fresh water and proper amount of inhibitor.
- Verify pH and inhibitor level per inhibitor manufacturer's specs; add inhibitor if necessary.

CHAPTER 10 - START-UP PREPARATION

10.1.7 Check and Test Antifreeze

For boiler systems containing antifreeze solutions, follow the antifreeze manufacturer's instructions in verifying the inhibitor level and to ensure the fluid characteristics are within specification requirements.

Due to the degradation of inhibitors over time, antifreeze fluids must be periodically replaced. Refer to the manufacturer of the antifreeze for additional instructions.

10.1.8 Use of Antifreeze in the Boiler System

⚠ WARNING

NEVER use automotive or ethylene glycol antifreeze or undiluted antifreeze in the system as freeze protection. This can result in substantial property damage, serious injury, or death.

Determine the antifreeze fluid quantity using the system water volume and following the antifreeze manufacturer instructions.

The water volume of the PRESTIGE Solo is approximately 3 gallons [12 L] for PRESTIGE Solo 80/110 or 5 gallons [19 L] for PRESTIGE Solo 155/175/250 or 7 gallons [26 L] for PRESTIGE Solo 299/399. Remember to include the volume of the expansion tank.

Check with local code requirements for the installation of backflow preventers or actual disconnection of the boiler's cold water fill or make up water supply line.

NOTICE

Massachusetts Code requires the installation of a backflow preventer if antifreeze is used.

Ensure the concentration of antifreeze to water does not exceed a 50/50 ratio.

NOTICE

System fluid including additives, must be practically non-toxic, having a toxicity rating or Class of 1, as listed in Clinical Toxicology of Commercial Products.

10.2. Filling the Boiler System

1. Close the boiler drain valve located on the bottom of the unit and any manual or automatic air vents in the system.
2. Open all system isolation valves.
3. Fill the boiler system to correct system pressure. Correct pressure will vary with each application.

NOTICE

Typical residential system fill pressure is 12 psi. System pressure will increase as system temperature increases. Operating pressure of the system should never exceed 25 psi.

4. Purge air and sediment in each zone of the boiler system through the purge valve. Open air vents to allow air to be purged from the zones.
5. Once the system is completely filled and purged of all air and sediment, check the system pressure and check/repair any leaks.

⚠ WARNING

Unrepaired system leaks will cause continual makeup water to be added to the boiler. Continual makeup water will cause mineral buildup within the heat exchanger, reducing the heat transfer, causing heat buildup and eventual heat exchanger failure. This can result in substantial property damage, serious injury, or death.

10.3. Check Low Water Cut-Off Device

- The PRESTIGE Solo is provided with a factory installed LWCO device that monitors system pressure.
- Access the Boiler Information Menu by following instructions in *Section 9.12 on page 50.* Scroll down to see the current system pressure and verify it is within the range given in *Section 10.2 above.*

CHAPTER 10 - START-UP PREPARATION

10.4. Check For Gas Leaks

⚠ WARNING

- **Prior to start-up and during initial operation, check for a gas leak using a combustable gas detector. Do not proceed with the start-up if there is any indication of a gas leak. Any leaks found must be repaired immediately.**
- **Propane installations only - The propane supplier mixes an odorant with the propane to make its presence detectable. In some cases the odorant can fade and the gas may no longer have an odor.**
- **Prior to start-up of the unit and periodically after start-up have the propane supplier check and verify the odorant level.**
- **Failure to comply with these instructions can result in substantial property damage, serious injury, or death.**

10.5. Check Thermostat Circuit

- Disconnect the external thermostat wires from the low voltage terminal strip.
- Connect a voltmeter across the wire ends of the external thermostat wiring.
- Close each thermostat, zone valve and relay in the external circuit one zone at a time and check the voltage reading across the wire ends.
- There should NEVER be voltage measured at the wire ends.
- If voltage is measured under any condition, check and correct the external wiring.

NOTICE

In systems using 3-wire zone valves, voltage backfeed to the unit is a common problem. Use an isolation relay to prevent voltage from the external circuit from entering the PRESTIGE Solo.

- Reconnect the external thermostat wires to the low voltage terminal strip.

10.6. Inspect Condensate Drain Assembly

1. Inspect and ensure the Condensate Drain Assembly is properly installed as described in *Section 5.2 on page 25.*
2. Remove the plug from the Condensate Drain Assembly and fill with fresh water.

⚠ WARNING

The condensate drain assembly must be filled with water when the PRESTIGE Solo is in operation. The condensate drain assembly prevents flue gas emissions from entering the condensate line. Failure to ensure trap is filled with water can result in serious injury, or death.

3. Re-Install plug in condensate drain assembly.

FOR YOUR SAFETY, READ BEFORE OPERATING

⚠ WARNING

If you do not follow these instructions exactly, a fire or explosion may result, causing substantial property damage, serious injury, or death.

A. This appliance does not have a pilot. It is equipped with an ignition device which automatically lights the burner. DO NOT try to light the burner by hand.

B. BEFORE OPERATING, smell all around the appliance area for gas. Be sure to smell next to the floor because some gas is heavier than air and will settle on the floor.

WHAT TO DO IF YOU SMELL GAS

- **Do not try to light any appliance.**
- **Do not touch any electric switch; do not use any phone in your building**
- **Immediately call your gas supplier from a neighbor's phone. Follow the gas supplier's instructions.**
- **If you cannot reach your gas supplier, call the fire department.**

C. Use only your hand to turn the external manual gas valve. Never use tools. If the valve will not turn by hand, don't try to repair it; call a qualified service technician. Force or attempted repair may result in a fire or explosion.

D. Do not use this appliance if any part has been under water. Immediately call a qualified service technician to inspect the appliance and to replace any part of the control system and any gas control which has been under water.

OPERATING INSTRUCTIONS

1. **STOP!** Read the safety information above. This appliance is equipped with an ignition device which automatically lights the burner. DO NOT try to light the burner by hand.
2. Set room thermostat(s) to lowest setting. Turn the external manual gas valve handle clockwise ↷ to "CLOSE" (valve handle must be perpendicular to gas piping).
3. Turn the service switch on the appliance control panel OFF.
4. Remove the front jacket panel on the unit.
5. Wait five (5) minutes to clear out any gas. If you then smell gas in the jacket enclosure or around the unit, STOP! Follow "B" in the safety information above. If you don't smell gas, go to the next step.
6. Turn the external manual gas valve handle counter clockwise ↶ to "OPEN" gas supply (valve handle shall be parallel to gas piping).
7. Turn the service switch on the appliance control panel "ON".
8. Set room thermostat(s) to desired setting(s).
9. The appliance control panel display will show the current operating status on the Status Line at the bottom of the screen. "Standby" means there is no call for heat (all thermostats are satisfied). "CH Demand" indicates a space heating call has been received. "DHW Demand" indicates a domestic hot water call has been received. A flame icon will be displayed when the unit is fired.
10. If the unit will not operate, follow the instructions "To Turn Off Gas to Appliance" and call your service technician or gas supplier.
11. Replace the front jacket panel. Make sure the panel is seated firmly in place and all mounting screws are tightened.

TO TURN OFF GAS TO APPLIANCE

1. Set the room thermostat to lowest setting.
2. Turn the service switch on the appliance control panel to "OFF"
3. Turn the external manual gas valve handle clockwise ↷ to "CLOSE".

11.1. Final Checks Before Start-Up

- Read *Chapter 9 on page 41* regarding the operation of the CTRLMax Boiler Management System.
- Verify the PRESTIGE Solo and the boiler system are full of water and all system components are correctly set for operation, including the minimum flow rate through the boiler, see specifications in *Chapter 19 on page 87.*.
- Verify Start-up Preparation items outlined in *Chapter 10 on page 55* have been completed.
- Verify all electrical connections are correct and securely fastened.
- Inspect vent and combustion air piping for signs of deterioration from corrosion, physical damage or sagging. Verify combustion air and vent piping are intact and correctly installed and supported. Reference the PRESTIGE Vent Supplement.
- Verify burner configuration - Propane only.
  - Check for proper labeling on the gas valve and the rating label for propane configuration.
  - If there is doubt on the burner configuration, remove the gas valve and check for proper propane gas orifice size. Refer to *Section 6.3.2 on page 29* for orifice sizes. Refer to *Fig 16 and Fig. 17 on page 30 or Fig. 18 on page 31* for location of the propane gas orifice.
- Ensure the Condensate Drain Assembly is filled with water.

11.2. PRESTIGE Solo Start-Up

1. Press the ON-OFF button located on the front control panel to the OFF position. Turn ON the electrical supply/service to the unit.
2. Read and follow the Operating Instructions outlined on previous page.

If PRESTIGE Solo Does Not Start Correctly

1. Check for loose electrical connections, blown fuses on control module, or an open service switch.
2. Verify CH and DHW operation is enabled. A radiator or faucet icon with an X through it indicates that function is disabled.
3. Check the system pressure in the Boiler Information Menu by following the instructions in *Section 9.12 on page 50.*.
4. Is an external limit (if applicable) open? Ensure the external limit is reset to the closed position.
5. Are the gas supply valves open at the unit and meter?
6. Is incoming gas supply pressure at the unit more than 5"w.c. and less than 13" w.c. with all gas appliances ON or OFF.
7. Are the heating thermostats set above room temperature?
8. Remove the blower assembly and verify the blower check valve is moving freely.

If none of these conditions correct the problem, contact Triangle Tube Technical Support.

11.3. Check the PRESTIGE Solo and System

11.3.1 Check Boiler Piping.

- Check Boiler system piping and components for leaks. If found, shut down the unit and repair immediately.
- Purge any remaining air from the system. Air in the system will interfere with circulation, creating heat distribution problems and noise.

11.3.2 Check Vent and Combustion Air Piping.

- Check for a gas-tight seal at every connection and seam of the vent and combustion air piping.

⚠ DANGER

Venting system must be sealed gas-tight to prevent flue gas spillage and carbon monoxide emissions, which will result in serious injury, or death.

11.3.3 Verify Carbon Monoxide Detector

Verify that at least two (2) carbon monoxide detectors are installed and operating properly. One must be installed in the mechanical room where the PRESTIGE Solo is located and another installed in the living area outside the bedroom(s).

11.3.4 Check Gas Piping

Check around the unit for gas odor following the procedure outlined in this manual *on page 58*.

⚠ DANGER

If any gas leaks are found or suspected, shut the unit down immediately. Use a gas detection device or bubble test to locate the source of the gas leak and repair at once. Do not operate the unit until the leak is corrected. Failure to comply with this procedure will result in substantial property damage, serious injury, or death.

11.3.5 Verify Flame Pattern and Combustion

1. Check the flame pattern through the observation port of the heat exchanger. The flame should be blue and stable. The flame should be over the length of the burner head.

NOTICE

Combustion testing and adjustments must be performed by a qualified installer, service agency or the gas supplier. All combustion measurements must be performed with recently calibrated equipment (1 year max.) to ensure proper reading and accuracy.

2. Test for CO_2 or O_2 and for CO during high firing rate. With the front door on, the combustion readings must be within the range listed in *Table 4 on page 61*. **The CO level must not exceed 100 ppm for natural gas and 150 ppm for propane gas when combustion is correct**. Perform the following procedure to manually place the burner into high fire.

   a. Press the round **INSTALLER** button. Reference *Section 9.1 on page 41*.

   b. Enter the installer access code "054" by using the **LEFT** and **RIGHT** buttons to select a digit and the **UP** and **DOWN** buttons to change the digit. Press the **OK** button to enter the access code.

   c. Press the **RIGHT** button to highlight the Manual Operation icon then press the **OK** button.

   d. Press the **OK** button while the FAN icon is highlighted to manually fire the burner and power the CH circulator(s).

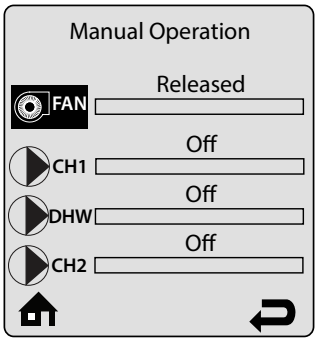

NOTICE

An adequate CH load must be present to dissipate the heat generated during the combustion test. If an adequate CH load is not available, an indirect water heater can be used to dissipate the heat by creating a DHW call which will enable the DHW circulator.

   e. Press the **RIGHT** button to adjust the firing rate from 1% to 100%. Hold down the **RIGHT** button to rapidly increase the firing rate.

   f. Press the **OK** button while the FAN icon is highlighted to shutdown the burner.

3. If the combustion levels during high fire (100%) are outside the acceptable levels, adjust the THROTTLE SCREW (see *Fig. 16 and Fig. 17 on page 30, and Fig. 18 on page 31*) according to *Table 3 on page 61*.
4. Once the combustion level is set at high fire (100%), manually place the boiler into low fire (1%) mode by pressing the **LEFT** button to adjust firing rate down.
5. Verify the combustion levels during low fire (1%) are within the acceptable combustion levels in *Table 4 on page 61*.

⚠ WARNING

If the combustion levels at low fire (1%) are not within the range given in *Table 4 on page 61*, **shut the boiler down and contact Triangle Tube Technical Support. Failure to comply with this requirement can result in substantial property damage, serious injury, or death.**

Table 3 - Throttle Screw Adjustment

Direction	PB 80/110/ 299/399	PB 155/175/250
Clockwise	Increase CO_2 Decrease O_2	Decrease CO_2 Increase O_2
Counter-Clockwise	Decrease CO_2 Increase O_2	Increase CO_2 Decrease O_2

11.3.6 Measure Input - Natural Gas Only

1. Ensure the boiler is firing at maximum firing rate. To manually place the boiler into high fire, reference *Section 11.3.5 on page 60*.
2. Operate the unit for approximately 10 minutes.
3. Turn off all gas appliances within the building, except the PRESTIGE Solo.
4. At the gas meter, record the time required to use one cubic foot of gas.
5. Calculate Natural gas input using the following equation:
   3600 x 1000 / number of seconds recorded for one cubic foot of gas = BTU/H.
6. The BTU/H calculated should approximate the input rating listed on the unit.

11.3.7 Test High Temperature Limit

The high temperature limit can be temporarily lowered from 210ºF [99ºC] to 102ºF [39ºC] for testing.

1. Press the round **INSTALLER** button. Reference *Fig. 25 on page 41.*.
2. Enter the installer access code "054" by using the **LEFT** and **RIGHT** buttons to select a digit and the **UP** and **DOWN** buttons to change the digit. Press the **OK** button to enter the access code.
3. Press the **OK** button while CH & DHW Settings icon is highlighted.
4. Press the **DOWN** button to highlight the Boiler Settings icon then press the **OK** button.
5. Press the **DOWN** button to highlight Lockout Temperature then press the **OK** button.
6. Press the **UP** button to highlight 102ºF [39ºC] then press the **OK** button.
7. Press the **DOWN** button to highlight the Home Screen icon then press the **OK** button.
8. Initiate a CH or DHW call and confirm that a High Boiler Temperature lockout occurs once the supply temperature reaches 102ºF [39ºC].
9. Press any **ARROW** button to return to the Home Screen.
10. Press the round **INSTALLER** button.
11. Press the **OK** button while the CH & DHW Settings icon is highlighted.
12. Press the **DOWN** button to highlight the Boiler Settings icon then press the **OK** button.
13. Press the **DOWN** button to highlight Lockout Temperature, then press the **OK** button.
14. Press the **DOWN** button to highlight 210ºF [99ºC] then press the **OK** button.
15. Press the **DOWN** button to highlight the Home Screen icon then press the **OK** button.
16. Press the **OK** button to reset the lockout and return the unit to service.

Table 4 - Acceptable Combustion Levels

		Natural Gas All Models	Propane PB 80/110/155/175/250/299	Propane PB 399
High Fire	CO_2 Range	8.8 to 10.5%	10.7 to 12.0%	10.4 to 11.4%
	CO_2 Target	9.2%	11.0%	
	O_2 Range	2.3 to 5.3%	2.7 to 4.7%	3.7 to 5.2%
	O_2 Target	4.6%	4.2%	
	CO Max	100 ppm	150 ppm	
Low Fire	CO_2 Range	0.5 to 0.6% Lower than High Fire CO2		
	O_2 Range	0.8 to 0.9% Higher than High Fire O2		

INTENTIONALLY LEFT BLANK

The use of the outdoor reset function is required to optimize boiler efficiency, see notice below. If the outdoor sensor is not installed before turning on the PRESTIGE Solo, an Outdoor Sensor Open error (E96) will be displayed. The error will not prevent the boiler from operating. The error will automatically reset once the outdoor sensor is installed or if the outdoor reset function is disabled. Reference *Section 9.7 on page 46* for information on disabling the outdoor reset function. The outdoor reset function can only be disabled if the installation meets one of the exceptions listed in the **IMPORTANT** notice below.

12.1. Mounting the Outdoor Sensor

1. The exterior wall selected for mounting the outdoor sensor should represent the heat load of the building. Typically a northern wall will suit most buildings.
2. Ensure the outdoor sensor is shielded from direct sunlight or the effects of heat or cold from other sources (exhaust fans, appliance vents...) to prevent false temperature readings.
3. Mount the outdoor sensor at an elevation on the exterior wall to prevent accidental damage or tampering.
4. Avoid mounting the outdoor sensor in areas subjected to excessive moisture.
5. Once an area on the exterior wall has been determined, follow the mounting instructions included with the outdoor sensor.

12.2. Wiring the Sensor

1. Connect 18 AWG 2-wire cable or similar to the outdoor sensor.
2. Route the cable back to the PRESTIGE Solo boiler, ensuring the wires are not run parallel to telephone or power wiring.

NOTICE

If the sensor wires are located in an area with sources of electromagnetic interference (EMI), the sensor wires should be shielded or the wires should be run in a grounded metal conduit. If using shielded cable, the shielding should be connected to the common ground of the unit.

3. Connect the outdoor sensor wires to low voltage terminals X6-1&2 located at the bottom of the CTRLMax control module as shown in *Fig. 22 on page 36.*

IMPORTANT

In accordance with Chapter 325 (f) (3) of the Energy Policy and Conservation Act, this boiler is equipped with a feature that saves energy by reducing the boiler water temperature as the heating load decreases. This feature is equipped with an override which is provided primarily to permit the use of an external energy management system that serves the same function.

THIS OVERRIDE MUST NOT BE USED UNLESS AT LEAST ONE OF THE FOLLOWING CONDITIONS IS TRUE.

- **An external energy management system is installed that reduces the boiler water temperature as the heating load decreases.**
- **This boiler is not used for any space heating**
- **This boiler is part of a modular or multiple boiler system having a total input of 300,000 BTU/hr or greater.**
- **This boiler is equipped with a tankless coil**.

INTENTIONALLY LEFT BLANK

The PRESTIGE Solo can directly accept an analog 0-10 VDC signal from an external modulating boiler controller to control the firing rate.

13.1. Wiring the Modulating Controller

Run two 18 gauge wires from the external modulating boiler controller's 0-10 VDC boiler output to low voltage terminals X5-1&2 located at the bottom of the CTRLMax control module, as shown in *Fig. 22 on page 36.*. This signal will both enable and modulate the boiler. No wiring is required at the thermostat terminals.

External modulating control will only function if the external modulating controller is properly wired to the PRESTIGE Solo as follows:

- X5-1 = +
- X5-2 = -

NOTICE

Ensure that the polarity of the connections from the external modulating boiler controller to the boiler are correct. Reversed polarity will lead to no response from the boiler.

13.2. CTRLMax Programming

The CTRLMax control module must be programmed to accept the 0-10 VDC signal from the external modulating boiler control.

1. Use the Heating EZ Setup function to set CH Demand to 0-10V Modulation Signal. Reference *Section 9.7 on page 46.*

13.3. Programming of External Modulating Control

The external modulating control must be programmed to send 2 VDC to enable the boiler and run it at low fire, and 10 VDC to run the boiler at high fire. Once the control enables the boiler, it must wait 30 seconds to allow the burner to stabilize before modulating the boiler.

Factory CTRLMax Settings

HEATING SETTING	FACTORY DEFAULT	MINIMUM SETTING	MAXIMUM SETTING	EZ SETUP RESET	INSTALLER RESET
Heating Operation	Enabled				✓
Demand Type	Thermostat & Outd. Curve			✓	✓
Absolute Max CH Setpoint	185°F [85°C]	68°F [20°C]	188°F [87°C]		✓
CH1 Maximum Setpoint	180°F [82°C]	68°F [20°C]	188°F [87°C]	180°F [82°C]	✓
CH1 Minimum Setpoint	80°F [27°C]	60°F [15°C]	188°F [87°C]	✓	✓
Outdoor Curve Coldest Day	10°F [-12°C]	-30°F [-34°C]	50°F [10°C]		✓
Outdoor Curve Warmest Day	64°F [18°C]	60°F [15°C]	78°F [25°C]		✓
CH2 Circuit	Enabled				✓
CH2 Maximum Setpoint	140°F [60°C]	68°F [20°C]	194°F [90°C]	✓	✓
CH2 Minimum Setpoint	80°F [27°C]	60°F [15°C]	190°F [88°C]	✓	✓
Warm Weather Shutdown	Off	Off	78°F [25°C]	✓	✓
Circulation Pump Permanent	Disabled				✓
CH Post Pump Time	5 Minutes	Off	20 Minutes		✓
Freeze Protection	Enabled				✓
Frost Protection Setpoint	-22°F [-30°C]	-22°F [-30°C]	50°F [10°C]		✓
Parallel Shift Value	0°F [0°C]	0°F [0°C]	144°F [80°C]		✓
CH Call Blocking	2 Minutes	0 Minute	30 Minutes		✓

Factory CTRLMax Settings (cont'd)

DHW SETTING	FACTORY DEFAULT	MINIMUM SETTING	MAXIMUM SETTING	EZ SETUP RESET	INSTALLER RESET
DHW Operation	Enabled				✓
Demand Type	Thermostat				
DHW Boiler Setpoint	168°F [75°C]	96°F [35°C]	188°F [87°C]	✓	✓
DHW Setpoint	140°F [60°C]	68°F [20°C]	168°F [75°C]	✓	✓
DHW On Differential	6°F [3°C]	4°F [2°C]	18°F [10°C]		✓
DHW Storage Adder	28°F [15°C]	10°F [5°C]	54°F [30°C]		✓
DHW Post Pump Time	2 Minutes	Off	30 minutes		✓
DHW Priority Timeout	Off	Off	120 Minutes	✓	✓
DHW Priority	Enabled				✓
DHW Call Blocking	0 Minute	0 Minute	30 Minutes		✓
DHW to CH Call Blocking	1 Minute	0 Minute	30 Minutes		✓
Antilegionella Function	Disabled			Enabled	✓

BOILER SETTING	FACTORY DEFAULT	MINIMUM SETTING	MAXIMUM SETTING	EZ SETUP RESET	INSTALLER RESET
Lockout Temp.	210°F [99°C]				✓
Modbus Address	0=BCST	0=BCST	247		✓
Flex. Relay 1(CH)	CH1				✓
Flex. Relay 2(DHW)	DHW				
Flex. Relay 3(P3)	CH1/CH2/DHW				
Flex. Relay 4(ERR)	ERROR				
Flex. Relay 5(Flame)	FLAME				
Flex. Relay 6(P4)	CH2				
Error Relay	On Lockout, Blocking and Warning				
Pump PWM Minimum	30%	1%	100%		
Ignition Level	Varies by model				
Mix Zone High Limit	114°F [45°C]	68°F [20°C]	176°F [80°C]		
Appliance Setting	Varies by model				

CASCADE SETTING	FACTORY DEFAULT	MINIMUM SETTING	MAXIMUM SETTING	EZ SETUP RESET	INSTALLER RESET
Stage Delay	60 Seconds	0 Second	255 Seconds		✓
Minimum Firing Rate	18%	0%	100%		✓
Max. Firing Rate	Varies by model	0 MBH [0kW]	869 MBH [255kW]		✓
CH/DHW Boilers	0	0	6		✓
Auto. Rotation	Enabled				✓
CH Prop. Gain	7	1	255		✓
CH Integral Gain	245	1	255		✓
DHW Prop. Gain	7	1	255		✓
DHW Integral Gain	245	1	255		✓

NOTICE

Perform the following check-out procedures as outlined and check off items as completed. When procedures are completed, the installer should complete the installation record in Chapter 15 on page 69.

- ❑ Boiler system fluid chemistry checked and verified as outlined in *Section 10.1 on page 55.*.
- ❑ Boiler system was completely flushed to remove any debris/sediment.
- ❑ Any automatic air vents placed within the system are open one full turn.
- ❑ Air is purged from the heating zones and boiler system piping.
- ❑ If applicable, confirm that the burner has been properly configured for Propane as outlined in *Section 6.3 on page 29*.
- ❑ Thermostat circuit wiring checked and verified that no voltage is present as outlined in *Section 10.5 on page 57*.
- ❑ Operating Instructions *on page 58* were followed during start-up.
- ❑ Combustion levels and flame pattern verified as outlined in *Section 11.3.5 on page 60*.
- ❑ Measured the rate of input on Natural Gas as outlined in *Section 11.3.6 on page 61.*
- ❑ Test high temperature limit as outlined in *Section 11.3.7 on page 61.*
- ❑ Checked the incoming gas pressure to the PRESTIGE Solo to ensure a minimum pressure of 5"w.c during flow conditions to all gas appliances and a maximum pressure of 13"w.c during non-flow conditions for Natural and Propane.
- ❑ Adjusted balancing valves and system limit controls to provide design temperatures to the primary space heating system.
- ❑ In multiple zone applications, adjusted for correct flow of boiler water to each zone.
- ❑ Checked and verified room thermostat(s) function properly and the thermostat(s) heat anticipator (if used) was properly set.
- ❑ Observed several operating cycles for proper operation of the PRESTIGE Solo and the system.
- ❑ Set the room thermostat(s) to the desired room temperature.
- ❑ Reviewed all instructions shipped with the PRESTIGE Solo with the homeowner or maintenance personnel.
- ❑ Completed the Installation Record of *Chapter 15 on page 69.*
- ❑ Ensure all manuals and other documents are returned to the Installation envelope and given to the owner for safekeeping.

INTENTIONALLY LEFT BLANK

CHAPTER 15 - INSTALLATION RECORD

Ensure all manuals and other documents are returned to the Installation envelope and given to the owner for safekeeping.

PRESTIGE Model Number: _____

Serial Number: _____

Date of Installation: _____

Fuel: ☐ Natural Gas ☐ Propane

Measured Rate of Input: _____ Btu/hr

Combustion Readings:

CO_2 _____ %

O_2 _____ %

CO _____ ppm

The following items were completed during installation:

- ☐ Installation instructions have been followed and completed
- ☐ Check-out procedures have been followed and completed
- ☐ Information regarding the unit and installation received and left with owner / maintenance personnel.

Installer Information

(Company) _____

(Address) _____

(Address) _____

(Phone Number) _____

INTENTIONALLY LEFT BLANK

16.1. Service Technician

At least on an **annual** basis the following maintenance should be performed by a qualified service technician:

General

- Attend to any reported problems.
- Inspect the interior of the boiler jacket area; clean and vacuum if necessary.
- Clean the condensate drain assembly and fill with fresh water.
- Check boiler fluid pH on systems.
- Check for leaks, both inside and outside the unit: water, gas, flue and condensate.
- Verify vent piping and air inlet piping are in good condition, sealed tight and properly supported.
- Check boiler water pressure, piping and expansion tank.
- Check control settings.
- Check ignition electrode (sand off any white oxide; clean and reposition).
- Check ignition wiring and ground wiring.
- Check all control wiring and connections.
- Check burner flame pattern (stable and uniform).
- Check carbon monoxide detectors.
- Check the combustion levels (refer to start up procedure in *Chapter 11 on page 59* and to *Table 4 on page 61*).

Additional items if combustion or performance is poor:

- Clean heat exchanger and flue ways.
- Remove burner assembly and clean burner head using compressed air only.

Once the maintenance items are completed, review the service with the owner.

16.2. Owner Maintenance

Periodically:

- Check the area around the unit.
- Check and remove any blockage from the combustion air inlet and ventilation openings.
- Check the temperature and pressure gauges.

Monthly:

- Check vent piping.
- Check combustion air inlet piping.
- Check the pressure relief valve.
- Check the condensate drain system.

Every 6 months:

- Check boiler piping and gas supply piping for corrosion or potential signs of leakage.
- Operate the pressure relief valve.
- Check carbon monoxide detectors.

⚠ WARNING

Follow the maintenance procedures given throughout this manual. Failure to perform the service and maintenance or follow the directions in this manual can result in damage to the PRESTIGE Solo or system components, resulting in substantial property damage, serious injury, or death.

INTENTIONALLY LEFT BLANK

17.1. Service Technician Maintenance Procedures

⚠ WARNING

The PRESTIGE Solo must be inspected and serviced annually, preferably at the start of the heating season, by a qualified service technician. In addition, the owner maintenance and care of the unit as outlined in *Chapter 16 on page 71* **and further explained in the Prestige User's Information manual should be performed to assure maximum efficiency and reliability of the unit. Failure to service and maintain the PRESTIGE Solo and the system components can result in equipment failure, resulting in substantial property damage, serious injury, or death.**

NOTICE

The following information provides detailed instructions for completing the service technician maintenance items outlined in the maintenance schedule of Chapter 16 on page 71.

17.2. Reported Problems

Any problems reported by the owner should be checked, verified and corrected before proceeding with any maintenance procedures.

17.3. Check Surrounding Area

- Verify that the area surrounding the PRESTIGE Solo is free of combustible / flammable materials or flammable vapors or liquids. Remove immediately if found.
- Verify that combustion air inlet area is free of any contaminates. Refer to the materials listed in *Section 2.1 on page 3* of this manual. If any of these products are in the area from which the unit takes its combustion air, they must be removed immediately or the combustion air intake must be relocated to another area.

17.4. Inspect Burner Area

- Remove the boiler front jacket panel and venturi inlet elbow.
- Vacuum any dirt or debris from the burner/blower components.
- Check the burner plate mounting nuts for tightness, see *Section 17.24 on page 76* for torque specification.
- Check burner plate gasket for discoloration or damage.
- Check for flue gas leakage where the condensate pan connects to the heat exchanger and at the top and bottom of the internal vent pipe.
- Re-install venturi inlet elbow and front jacket panel when completed.

⚠ WARNING

Do not use solvents to clean any of the burner components. The components could be damaged, resulting in unreliable or unsafe operation. Failure to comply with this instruction can result in substantial property damage, serious injury, or death.

17.5. Check System Piping

- Inspect all water and gas piping for leaks and verify that the piping is properly supported.
- Inspect the fittings and components on the unit and verify they are leak free.

⚠ WARNING

Eliminate all system water leaks. Continual fresh make-up water will reduce the heat exchanger life causing boiler failure. Leaking water may also cause severe property damage to the surrounding area. Inspect the gas supply piping using the procedure outlined in Section *11.3.4 on page 60.* **Failure to comply with this instruction can result in substantial property damage, serious injury, or death.**

17.6. Clean Condensate Drain Assembly

- Loosen the retaining nut from the condensate drain assembly and disconnect the assembly from the boiler.
- Empty any water from the trap and flush with fresh water as necessary to clean.
- Remove plastic ball and clean with fresh water.
- Check the drain piping from the condensate drain assembly to the drain. Flush to clean as necessary.
- Install the plastic ball into the condensate drain assembly and reassemble onto the boiler by tightening the retaining nut with rubber seal onto the boiler. Hand tight only.
- Remove the fill plug on the condensate drain assembly and fill with water. See *Fig. 14 on page 26*.
- Replace the fill plug on drain assembly.

17.7. Check Ventilation Air Openings

- Verify that all ventilation openings to the mechanical room or building are open and unobstructed. Check the operation and wiring of any automatic ventilation dampers.
- Check and verify the vent termination and the combustion air intake are free of debris and obstructions.

17.8. Inspect Vent and Combustion Air Piping

- Visually inspect the venting system and combustion air piping for blockage, deterioration of gaskets or leakage. Repair any deficiencies.
- Verify that the combustion air inlet and vent piping is connected, sealed and properly supported.

⚠ DANGER

Failure to inspect the vent system and combustion air inlet piping and to have any conditions repaired, will result in serious injury, or death.

17.9. Check Boiler System

- Verify all system components are correctly installed and operating properly.
- Check the cold fill pressure for the system. Typical cold water fill pressure is 12 psig.
- Verify the system pressure, as the unit operates at high temperature, does not exceed 25 psig. Excessive pressure indicates expansion tank sizing is incorrect or system performance problems.
- Inspect air vent and air separators in the system. Ensure vents do not leak, replace any leaking vents.
- Verify boiler fluid pH level is between 6.0 and 8.0.
- Check and verify inhibitor /antifreeze concentration within the boiler water meets inhibitor/antifreeze manufacturer's specifications.
- If necessary contact a boiler water treatment company for a chemical analysis.

17.10. Check Expansion Tank

Refer to *Chapter 4 on page 13* for recommended location of the expansion tank and air eliminators.

Closed -Type Tank:

- Ensure tank is partially filled with water leaving an air gap as a cushion. Refer to the manufacturer's instruction for proper fill level.
- Ensure the tank is fitted with a device that reduces gravity circulation of air-saturated tank water back into the system. This device prevents air from bubbling up through the water as it returns from the system.
- Ensure no automatic air vents are used in the system. This will allow air to escape from the system instead of returning to the tank.

Diaphragm Tank:

- Ensure the system contains a minimum of one automatic air vent. Recommended location of the air vent should be atop an air eliminator.
- Remove the tank from the system and check the charge pressure. For residential applications, the charge pressure is typically 12 psig. If tank does not hold pressure, then the membrane is damaged and the tank should be replaced.

17.11. Check Boiler Relief Valve

Inspect the relief valve and lift the lever to verify flow at least annually or as recommended on the warning tag of the valve.

⚠ WARNING

Before manually operating the pressure relief valve, ensure the discharge piping is directed to a suitable place of disposal to avoid a potential scald hazard. The discharge piping must be full size without restriction and installed to permit complete drainage of both the valve and line. Failure to comply with this instruction can result in substantial property damage, serious injury, or death.

If after closing the valve, the valve fails to seat properly or continually weeps, replace the relief valve. Ensure the cause of the relief valve to weep is the valve itself, not due to system over-pressurization caused by an expansion tank that is waterlogged or undersized.

17.12. Inspection of Ignitor

- Remove the ignitor from the burner mounting plate.
- Remove any white oxides accumulated on the ignitor using fine grit sandpaper or steel wool. If the ignitor does not clean to a satisfactory condition, replace the ignitor.
- When installing the ignitor, ensure the gasket is in good condition and correctly positioned. Replace the gasket if necessary. Tighten ignitor screws in multiple steps, alternating between the screws to ensure proper alignment. See *Section 17.24 on page 76* for torque specifications.

17.13. Check Ignition Cable and Ground Wiring

- Inspect the ignition cable from the ignitor to the spark generator.
- Inspect the ground wire from the ignitor to the CTRLMax control module.
- Inspect the wiring between the spark generator and the CTRLMax Control module.
- Ensure wiring is in good condition and securely connected.
- Check ground continuity using a continuity meter.
- Replace ground wire if ground continuity is not satisfactory.

17.14. Check Control Wiring

Inspect all control wiring. Ensure wiring is in good condition and properly connected.

17.15. Check Control Settings

- Review all boiler settings in the Heating & DHW EZ Setup menus. Adjust settings as necessary, see *Section 9.7 on page 46 and Section 9.8 on page 48*
- Check any external limit control settings (if used). Adjust settings as necessary.

17.16. Perform Start-up and Checkout Procedures

- Start the unit and perform the start-up procedures as listed in *Chapter 11 on page 59*.
- Verify the cold water fill pressure is correct and the operating pressure of the boiler is within normal operating range.
- Complete the checkout procedures as outlined in *Chapter 14 on page 67.*

17.17. Check Burner Flame

- Inspect the flame pattern through the observation port of the heat exchanger.
- If flame pattern is not fully blue and covers the entire burner surface during high fire, shut the unit down and allow it to cool thoroughly before disassembly.
- Close the external manual gas valve on the gas supply line and disconnect the gas piping and gas valve wire harness connector.
- Disconnect the wiring harness connectors from the blower and remove the blower clamp. Remove the blower from the unit.
- Remove the mounting nuts securing the burner plate to the heat exchanger and set aside.
- Carefully remove the burner plate assembly from the heat exchanger. Ensure that the combustion chamber 2-in-1 insulation is not damaged during removal of burner mounting plate assembly. Make sure that there are no released stiches or frayed areas.
- Remove the burner head mounting screws and remove the burner head. Inspect the burner head for deterioration. Use compressed air or a vacuum to clean the burner head.
- Remove the venturi and gas valve assembly from the blower.
- Use a vacuum cleaner or compressed air to clean the interior of the blower assembly. Inspect the blower blades to ensure they are clean and not damaged.
- Re-assemble the venturi and gas valve onto the blower. Ensure the venturi gasket or o-ring is in good condition and positioned correctly. Replace gasket or o-ring if necessary.
- Re-assemble the burner head onto the burner mounting plate. Ensure the burner head gasket is in good condition and positioned correctly. Replace gasket if necessary.
- Re-assemble the burner plate assembly onto the heat exchanger. Ensure the combustion chamber 2-in-1 insulation is in place and positioned correctly. Replace if necessary.
- Remove the blower gasket from the burner plate assembly and clean with fresh water. Reinstall blower gasket onto burner plate assembly with the check valve hinge at the top.
- Re-assemble the blower onto the burner plate and reconnect the wiring harness connectors.
- Re-assemble the gas supply connection and wire harness to the gas valve. Open the external manual gas valve. Check gas piping for any leaks as outlined in *Section 10.4 on page 57* and repair if necessary.
- Torque all screws, bolts, and nuts in accordance with specifications in *Section 17.24 on page 76*.
- Place the unit back into service.

17.18. Check Flame Signal

- The flame signal can be read from the Boiler Information screen. It should be a min. 2-3 µA at low fire.
- Check the ignitor condition if flame signal is low.
- Check ground wire for continuity if flame signal is low. Replace ignitor if conditions are satisfactory.

17.19. Check Combustion Levels

Refer to *Section 11.3.5 on page 60* for measuring combustion levels and burner adjustments.

17.20. Check Flue Gas Temperature

- Manually place the boiler into high fire. See *Section 11.3.5 on page 60* for procedure.
- Navigate to the Boiler Information Menu to observe the flue gas temperature. See *Section 9.12 on page 50* .
- If the flue gas temperature is more than 54°F [30°C] above the supply water temperature, shut the boiler down and follow the heat exchanger cleaning procedure below.

17.21. Clean Heat Exchanger

Shut down the boiler:

- Follow the instructions on Page 58 "To Turn Off Gas to Appliance"
- Do not drain the boiler unless the boiler will be subject to freezing conditions.
- Do not drain the boiler if antifreeze is used in the system.

- Allow the boiler to cool down to room temperature before servicing.
- Close the external manual gas valve on the gas supply line and disconnect the gas piping and gas valve wire harness connector.
- Disconnect the wiring harness connectors from the blower and remove the blower clamp. Remove the blower from the unit.
- Remove the mounting nuts securing the burner plate to the heat exchanger and set aside.
- Carefully remove the burner plate assembly from the heat exchanger. Ensure that the combustion chamber 2-in-1 insulation is not damaged during removal of burner mounting plate assembly.
- Use compressed air or water to remove any accumulation from the heat exchanger flue ways.
- Re-assemble the burner plate assembly onto the heat exchanger. Ensure the combustion chamber 2-in-1 insulation is in place and positioned correctly. Replace if necessary.
- Remove the blower gasket from the burner plate assembly and clean with fresh water. Reinstall blower gasket onto burner plate assembly with the check valve hinge at the top.
- Re-assemble the blower onto the burner plate and reconnect the wiring harness connectors.
- Reconnect the gas piping and wire harness to the gas valve. Open the external manual gas valve. Check gas piping for any leaks as outlined in *Section 10.4 on page 57* and repair if necessary.
- Torque all screws, bolts, and nuts in accordance with specifications in *Section 17.24 on page 76*.
- Close isolation valves on the boiler water piping to isolate the boiler from the heating system.
- Attach a hose to the boiler drain valve and flush the boiler thoroughly with fresh water by using the purge valves to allow water to enter through the make-up water line to the boiler.
- Once the boiler has been completely flushed, return the boiler back into operation.
- Perform the required startup and checkout procedures as outlined in *Chapter 10 on page 55 and Chapter 14 on page 67*.

17.22. Check Carbon Monoxide Detectors

Verify that at least two (2) carbon monoxide detectors are installed and operating properly. One must be installed in the mechanical room where the PRESTIGE Solo is located and another installed in the living area outside the bedroom(s).

17.23. Review With Owner

Ensure the owner understands the importance of performing the maintenance schedule specified in this manual.

17.24. Torque Specifications Table

	Torque Req'd (in-lbs)	
Item	***Min.***	***Max.***
Burner Plate Nuts	*44*	*53*
Burner Head Bolts	*26.5*	*31*
Fan Clamp Screw	*62*	*71*
Gas Valve Screws	*31*	*35*
Venturi Screws	*31*	*35*
Ignitor Screws	*13*	*18*

⚠ WARNING

- **Replacement parts must be purchased through a local Triangle Tube distributor. When ordering a part, please provide the model number and description and/or part number of replacement part.**
- **Use only genuine Triangle Tube replacement parts to ensure warranty coverage and to avoid improper operation or damage to appliance.**
- **Contact Triangle Tube at 856-228-8881 or www.triangletube.com for a list of distributors near you.**

Fig. 26 - PRESTIGE Solo 80/110 Jacket Components

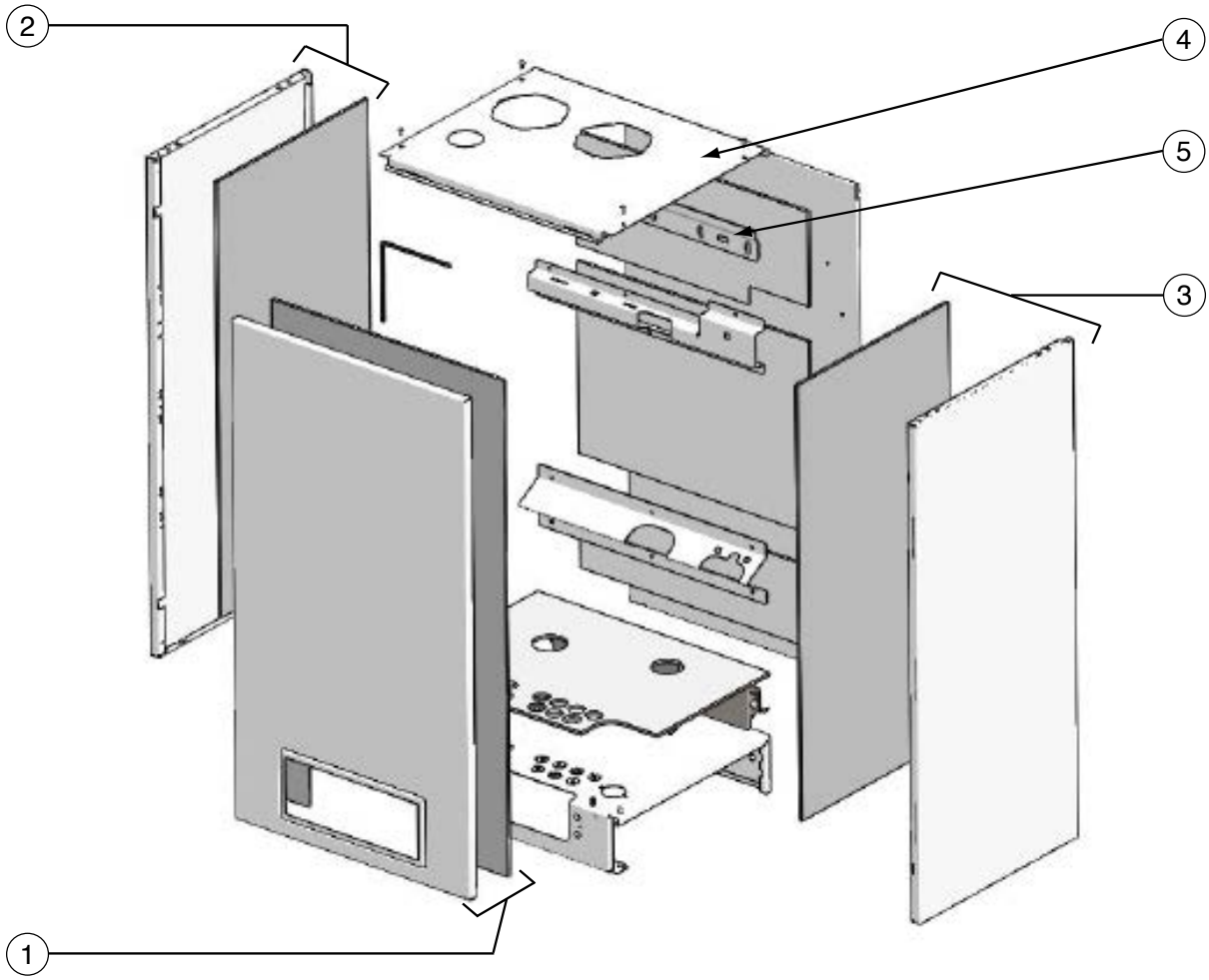

Item	Part #	Description
1	PAJKT01	Front Jacket Panel (with insulation)
2	PAJKT03	Left Side Jacket Panel (with insulation)
3	PAJKT21	Right Side Jacket Panel (with insulation)
4	PAJKT04	Top Panel
5	PSRKIT21	Wall Mounting Bracket with Hardware

Fig. 27 - PRESTIGE Solo 155/175/250 Jacket Components

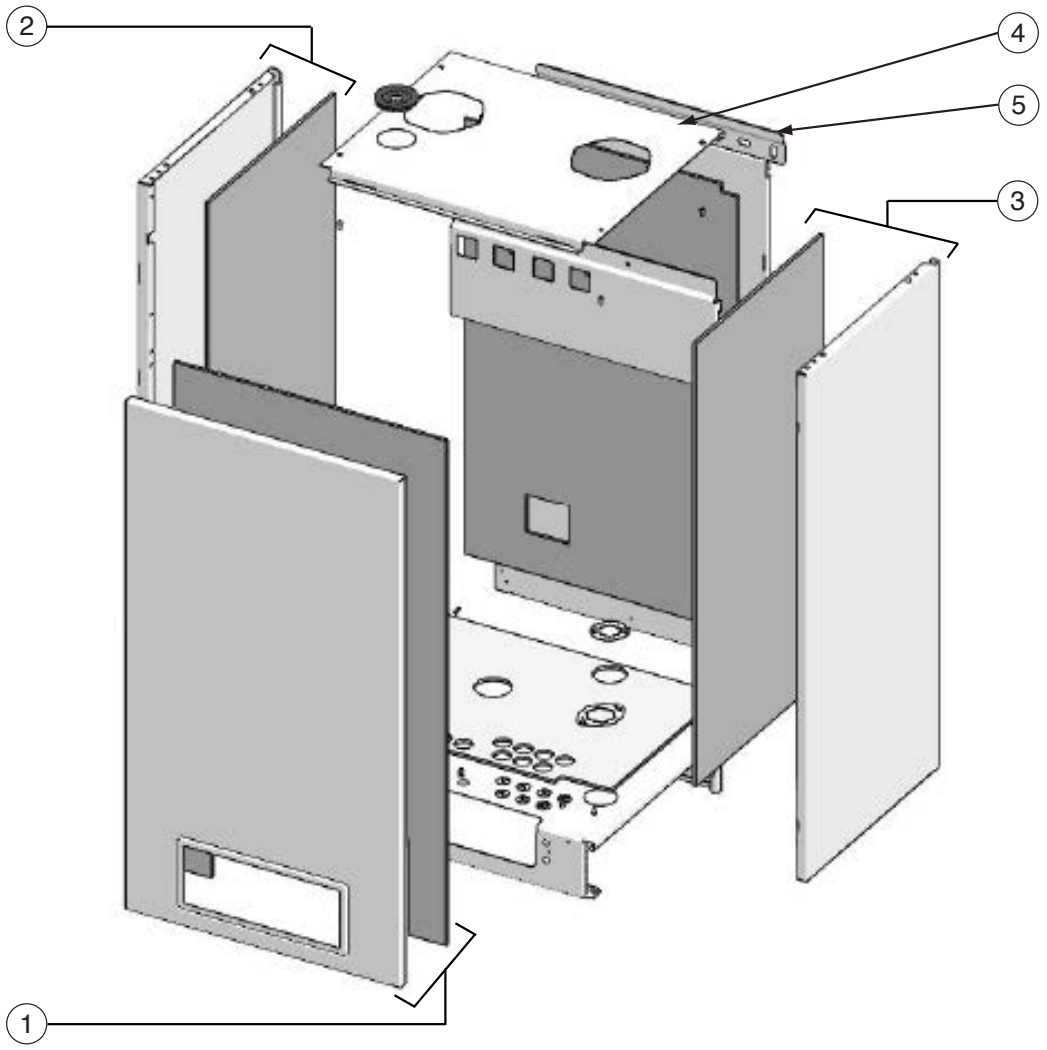

Item	Part #	Description
1	PAJKT01	Front Jacket Panel (with insulation)
2	PAJKT03	Left Side Jacket Panel (with insulation)
3	PAJKT21	Right Side Jacket Panel (with insulation)
4	PAJKT12	Top Panel
5	PSRKIT21	Wall Mounting Bracket with Hardware

Fig. 28 - PRESTIGE Solo 299/399 Jacket Components

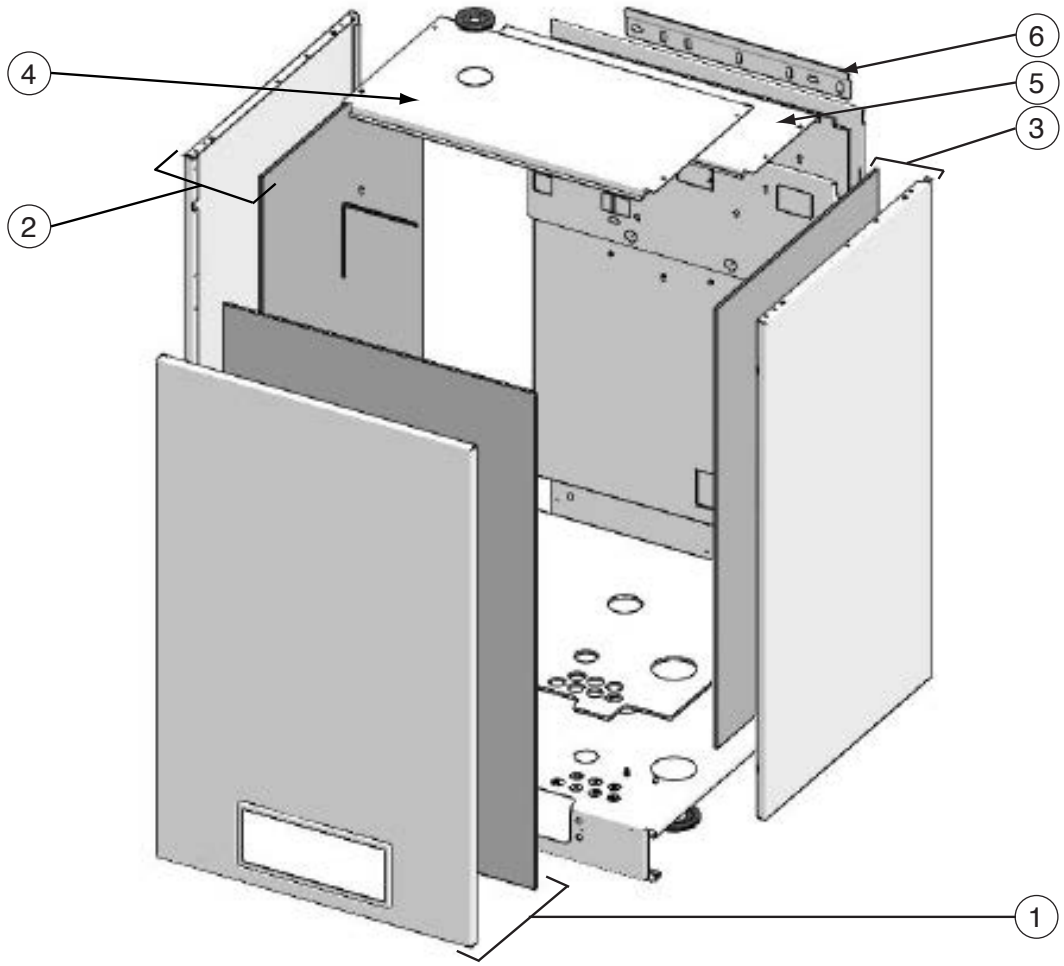

Item	Part #	Description
1	PAJKT15	Front Jacket Panel (with insulation)
2	PAJKT16	Left Side Jacket Panel (with insulation)
3	PAJKT22	Right Side Jacket Panel (with insulation)
4	PAJKT17	Top Panel - Front
5	PAJKT18	Top Panel - Rear
6	PSRKIT21	Wall Mounting Bracket with Hardware

Fig. 29 - PRESTIGE Solo 80/110 Internal Components

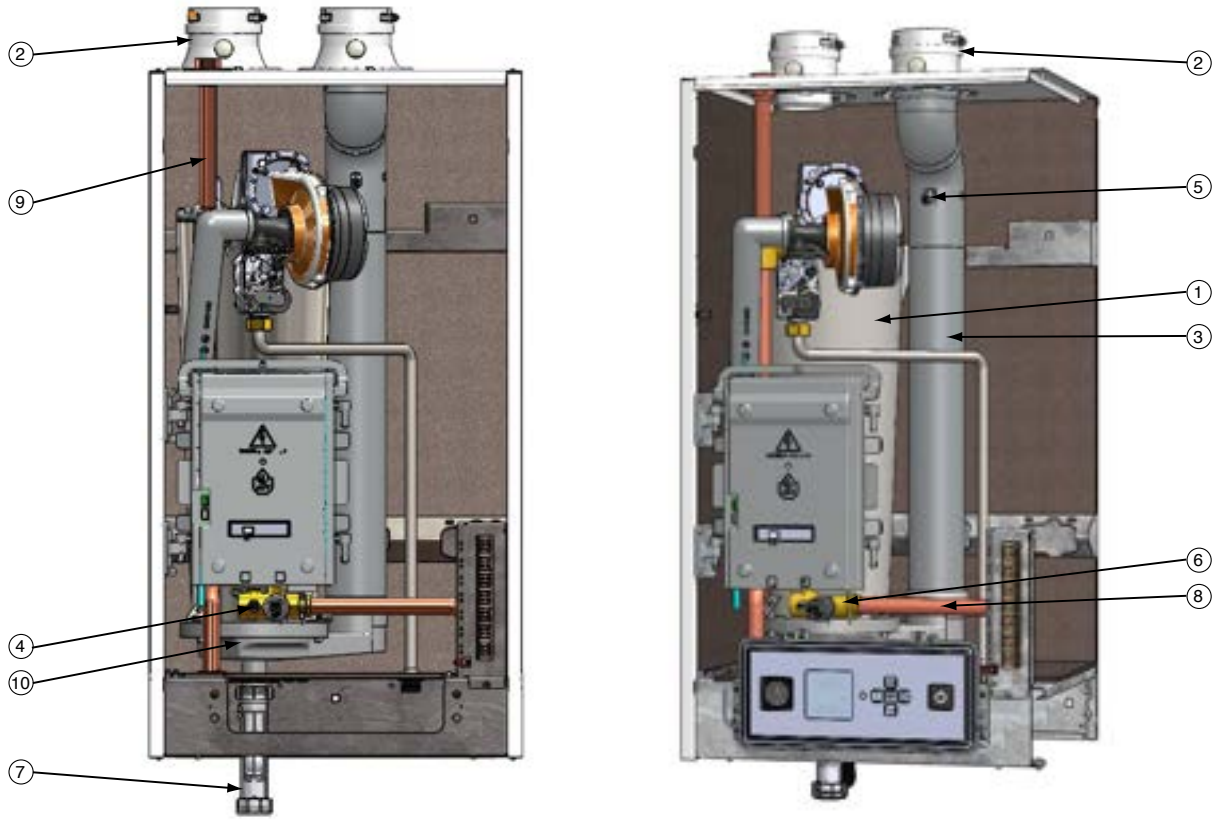

Item	Part #	Description
1	PARKIT90	Heat Exchanger Body
2	PTADPT07	Vent Outlet/Combustion Air Inlet Adapter
3	PARKIT02	Polypropylene Vent Pipe
4	PTRKIT123	Supply/Return Temperature Sensor
5	PARKIT01	Flue Temperature Sensor
6	PARKIT04	LWCO Pressure Sensor
7	PARKIT05	Condensate Drain Assembly
8	PARKIT06	Boiler Piping - Return Assembly
9	PARKIT07	Boiler Piping - Supply Assembly
10	PTRKIT119	Polypropylene Condensate Pan 80/110

Fig. 30 - PRESTIGE Solo 155/175/250 Internal Components

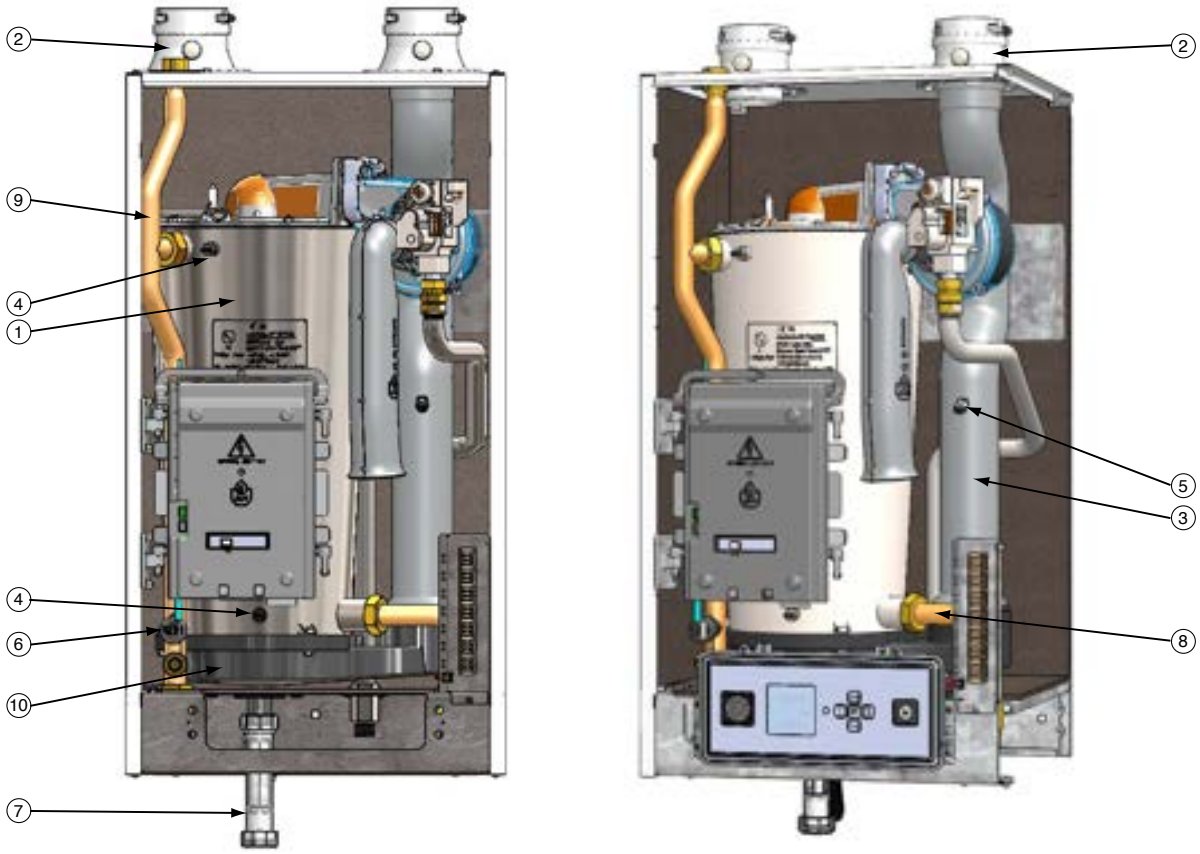

Item	Part #	Description
1	PARKIT91	Heat Exchanger Body Solo 155
	PARKIT92	Heat Exchanger Body Solo 175
	PARKIT93	Heat Exchanger Body Solo 250
2	PTADPT07	Vent Outlet/Combustion Air Inlet Adapter
3	PARKIT08	Polypropylene Vent Pipe
4	PTRKIT122	Supply/Return Temperature Sensor
5	PARKIT01	Flue Temperature Sensor
6	PARKIT04	LWCO Pressure Sensor
7	PSRKIT05	Condensate Drain Assembly
8	PARKIT46	Boiler Piping - Return Assembly
9	PARKIT47	Boiler Piping - Supply Assembly
10	PARKIT43	Polypropylene Condensate Pan Solo 155
	PTRKIT120	Polypropylene Condensate Pan Solo 175 & 250

Fig. 31 - PRESTIGE Solo 299/399 Internal Components

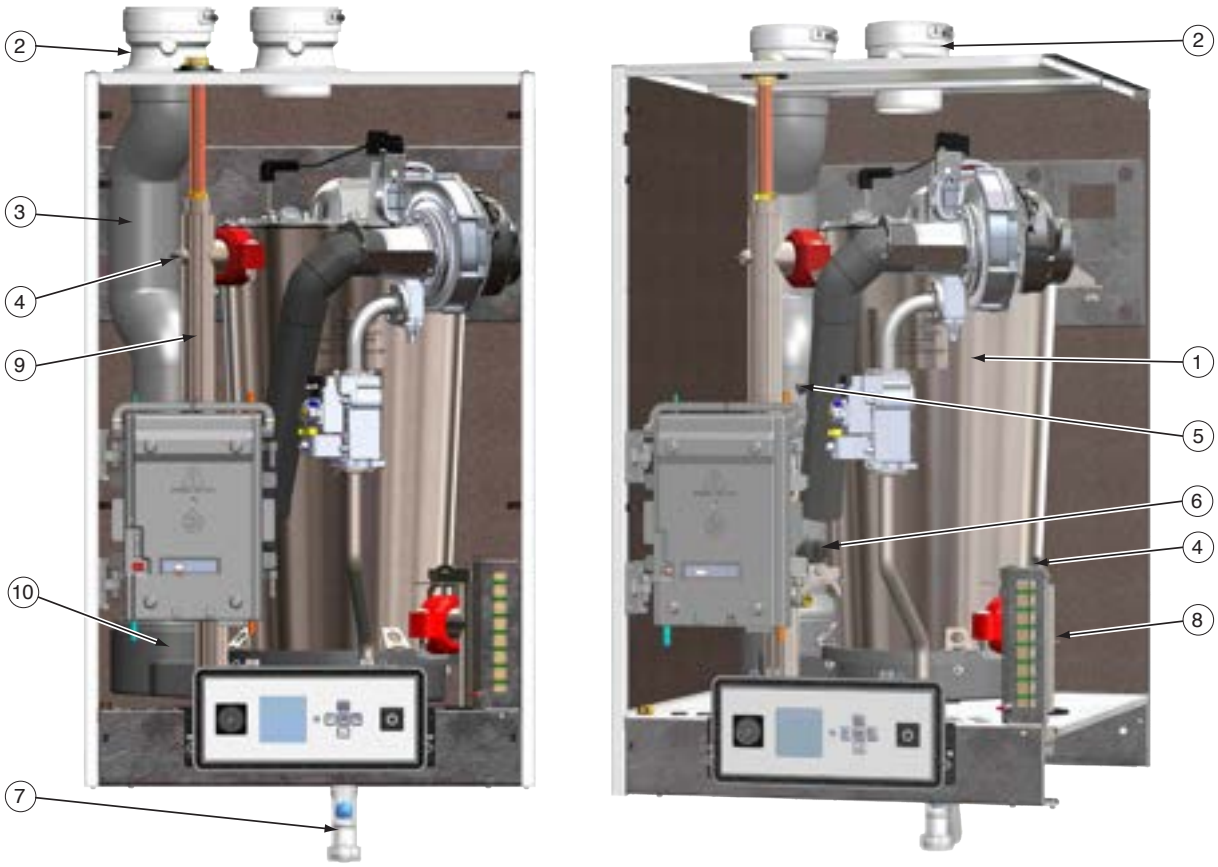

Item	Part #	Description
1	PARKIT94	Heat Exchanger Body Solo 299
	PARKIT95	Heat Exchanger Body Solo 399
2	PTADPT08	Vent Outlet/Combustion Air Inlet Adapter
3	PARKIT09	Polypropylene Vent Pipe
4	PARKIT78	Supply/Return Temperature Sensor
5	PARKIT01	Flue Temperature Sensor
6	PARKIT04	LWCO Pressure Sensor
7	PSRKIT05	Condensate Drain Assembly
8	PSRKIT48	Boiler Piping - Return Assembly
9	PSRKIT49	Boiler Piping - Supply Assembly
10	PTRKIT121	Polypropylene Condensate Pan Solo 299/399

Fig. 32 - PRESTIGE Solo 80/110 Burner Components

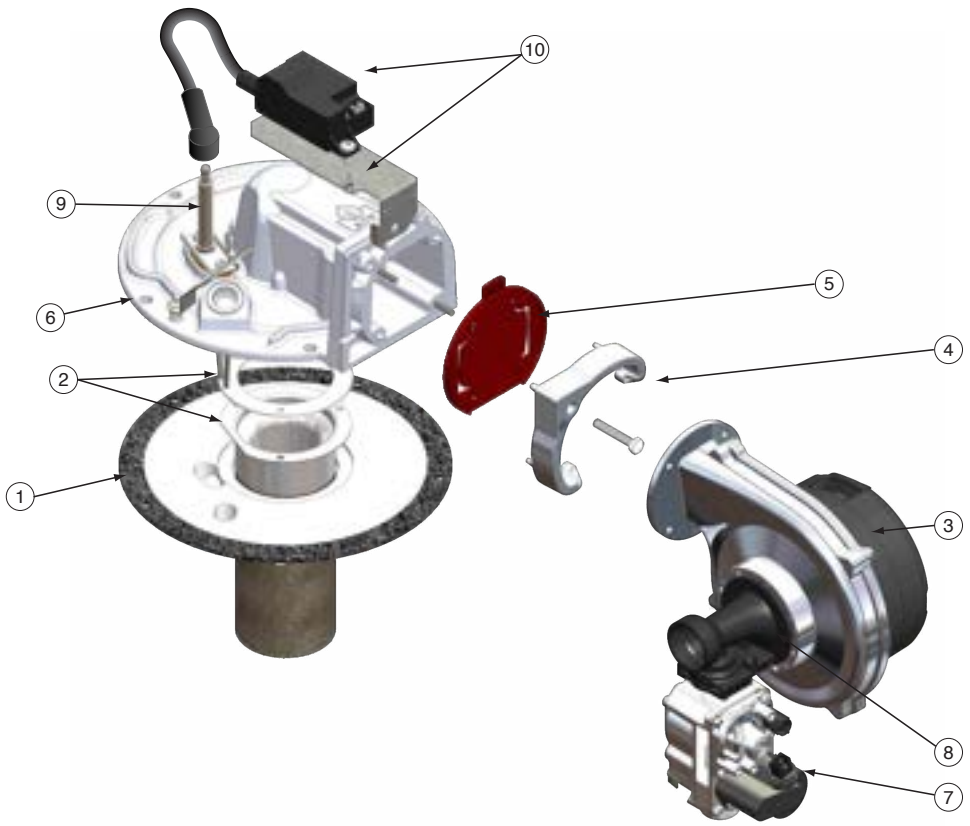

Item	Part #	Description
1	PARKIT12	Combustion Chamber 2-in-1 Insulation
2	PARKIT14	Burner Head Assembly (with Gasket)
3	PARKIT11	Blower Assembly (with Gasket)
4	PARKIT18	Blower Clamp
5	PARKIT19	Blower Gasket
6	PARKIT15	Burner Plate Assembly
7	PARKIT17	Gas Valve
8	PARKIT10	Venturi - Solo 80 (025)
	PARKIT20	Venturi - Solo 110 (040)
9	PARKIT130	Ignitor Assembly
10	PARKIT133	Spark Generator and Bracket

Fig. 33 - PRESTIGE Solo 155/175/250 Burner Components

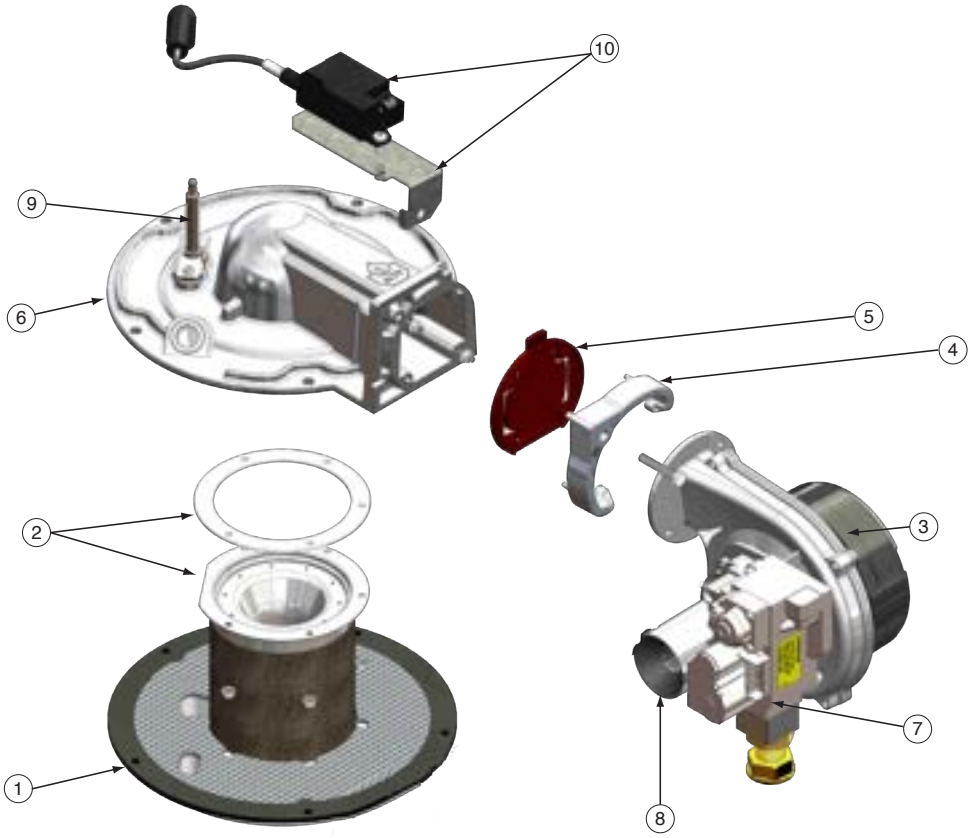

Item	Part #	Description
1	PARKIT42	Combustion Chamber 2-in-1 Insulation - Solo 155
	PARKIT52	Combustion Chamber 2-in-1 Insulation - Solo 175 & 250
2	PARKIT54	Burner Head Assembly (with Gasket)
3	PARKIT51	Blower Assembly (with Gasket) - Solo 155 & 175
	PARKIT70	Blower Assembly (with Gasket) - Solo 250
4	PARKIT18	Blower Clamp
5	PARKIT19	Blower Gasket
6	PARKIT45	Burner Plate Assembly - Solo 155
	PARKIT55	Burner Plate Assembly - Solo 175 & 250
7	PTRKIT111	Gas Valve
8	PSRKIT81	Venturi - Solo 155 (002)
	PARKIT40	Venturi - Solo 175 (001)
	PSRKIT83	Venturi - Solo 250 (051)
9	PARKIT131	Ignitor Assembly
10	PARKIT133	Spark Generator and Bracket

Fig. 34 - PRESTIGE Solo 299/399 Burner Components

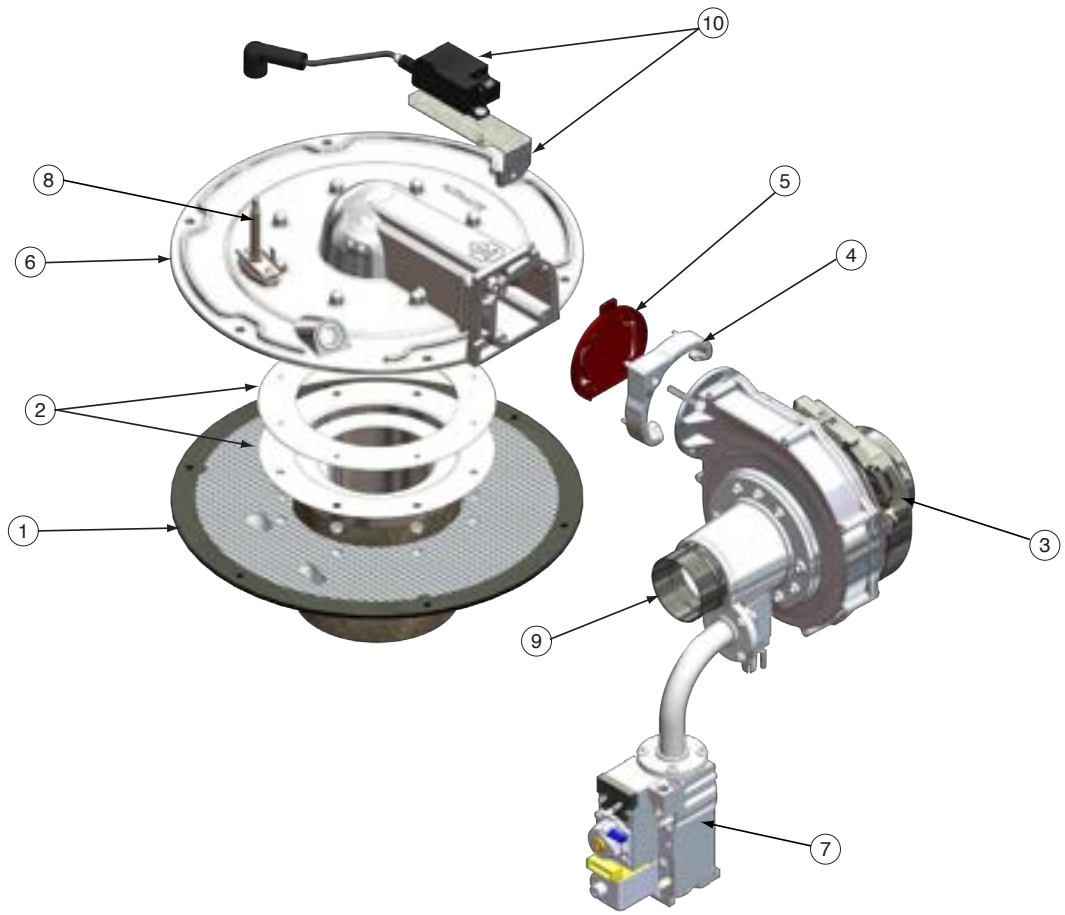

Item	Part #	Description
1	PARKIT72	Combustion Chamber 2-in-1 Insulation
2	PARKIT74	Burner Head Assembly (with Gasket)
3	TCRKIT16	Blower Assembly
4	PARKIT18	Blower Clamp
5	PARKIT19	Blower Gasket
6	PARKIT75	Burner Plate Assembly
7	TCRKIT18	Gas Valve
8	PARKIT132	Ignitor Assembly
9	TCRKIT19	Venturi
10	PARKIT133	Spark Generator and Bracket

Fig. 35 - PRESTIGE Solo Control & Display Enclosures

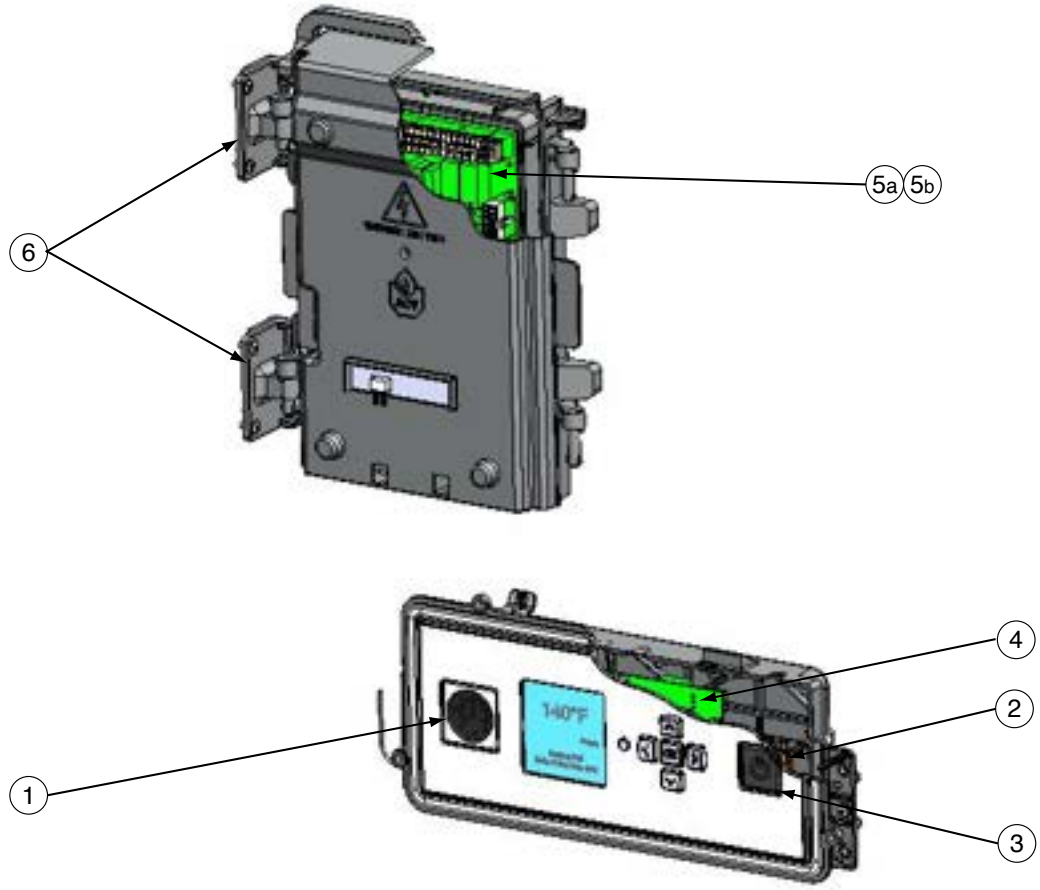

Item	Part #	Description
1	PTRKIT109	Pressure Gauge
2	TCRKIT22	Power Switch
3	PTSWI02	Power Switch Cover
4	PARKIT101	Display Module
5a	PARKIT102	Control Module (Requires Display Software 4.03 and up) **To be used with boiler serial numbers starting with PB**
5b		**Control Modules below are to be used with all other boiler serial numbers**
	PARKIT111	Control Module, Low altitude - Prestige Solo 80
	PARKIT121	Control Module, High altitude (> 5,000 ft) - Prestige Solo 80
	PARKIT112	Control Module, Low altitude - Prestige Solo 110
	PARKIT122	Control Module, High altitude (> 5,000 ft) - Prestige Solo 110
	PARKIT113	Control Module, Low altitude - Prestige Solo 155
	PARKIT123	Control Module, High altitude (> 5,000 ft) - Prestige Solo 155
	PARKIT114	Control Module, Low altitude - Prestige Solo 175
	PARKIT124	Control Module, High altitude (> 5,000 ft) - Prestige Solo 175
	PARKIT115	Control Module, Low altitude - Prestige Solo 250
	PARKIT125	Control Module, High altitude (> 5,000 ft) - Prestige Solo 250
	PARKIT116	Control Module, Low altitude - Prestige Solo 299
	PARKIT126	Control Module, High altitude (> 5,000 ft) - Prestige Solo 299
	PARKIT117	Control Module, Low altitude - Prestige Solo 399
	PARKIT127	Control Module, High altitude (> 5,000 ft) - Prestige Solo 399
6	PAHNG01	Control Box Hinges

Boiler Model	Fuel	Input	DOE Heating Capacity	Net AHRI Rating	AFUE	Shipping Weight Lbs / Kg
Solo 80	*Natural Propane*	*16,000 - 80,000*	*74,000*	*64,000*	*95%*	*103 / 47*
Solo 110	*Natural Propane*	*20,000 - 110,000*	*102,000*	*89,000*	*95%*	*103 / 47*
Solo 155	*Natural Propane*	*27,800 - 153,000*	*142,000*	*123,000*	*95%*	*118 / 53.5*
Solo 175	*Natural Propane*	*30,900 - 170,000*	*157,000*	*137,000*	*95%*	*128 / 58*
Solo 250	*Natural Propane*	*43,600 - 240,000*	*222,000*	*193,000*	*95%*	*140 / 63.5*
Solo 299	*Natural Propane*	*72,500 - 299,000*	*278,000*	*242,000*	*95%*	*210 / 95*

Boiler Model	*Fuel*	*Input*	*Output*	*Net AHRI Rating*	*Combustion Efficiency*	*Thermal Efficiency*	*Shipping Weight Lbs / Kg*
Solo 399	*Natural Propane*	*72,500 - 399,000*	*379,000*	*330,000*	*94.1%*	*95.1%*	*216 / 98*

NOTICE

- *The heating capacity of the PRESTIGE Solo 80/110/155/175/250/299 is based on the test requirements of the U.S. Department of Energy.*
- *The AHRI rating is based on a piping and pick up allowance of 1.15. This allowance should be sufficient for standard radiation requirements.*
- *Based on the given AFUE the PRESTIGE Solo 80/110/155/175/250/299 meets the energy efficiency guidelines established by Energy Star.*
- *Input and output ratings are shown for sea level applications. The PRESTIGE Solo automatically derates the input at approximately 2% for every 1,000 Ft. of altitude. No alterations to the boiler or burner system are required.*
- *PRESTIGE Solo 399 output rating is based off of the thermal efficiency.*

Fig. 36 - Front View PRESTIGE Solo 80/110

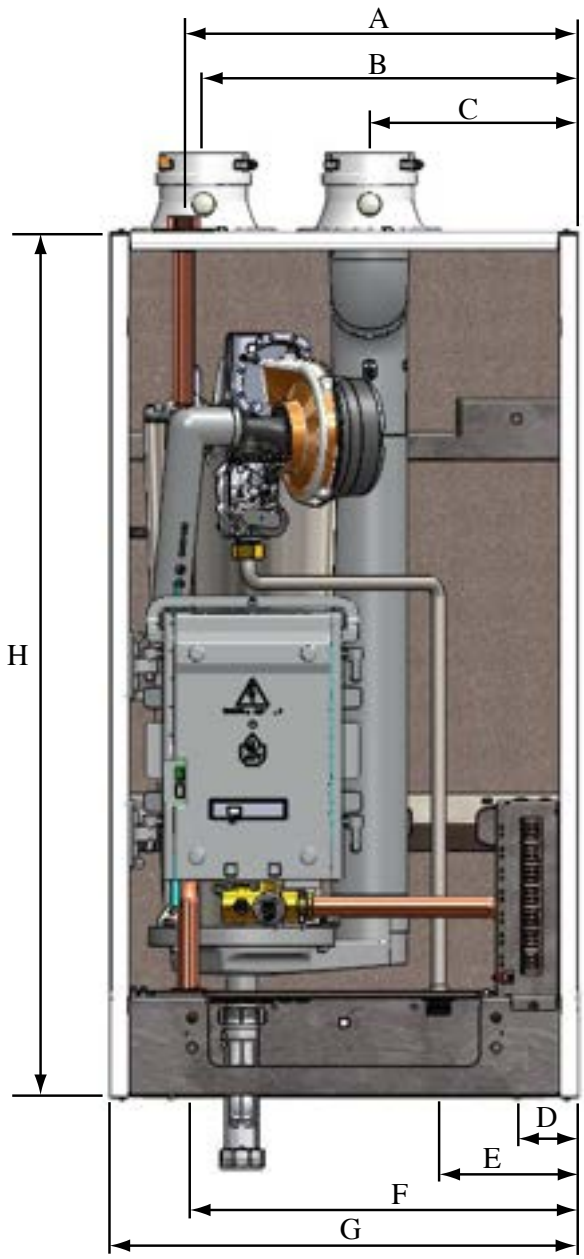

	A	B	C	D	E	F	G	H
Connection	3/4" NPSC Pressure Relief Valve	3" Combustion Air Inlet	3" Vent Outlet	1" NPT Boiler Return	1/2" NPT Gas Connection	1" NPT Boiler Supply	Boiler Width	Boiler Height
Dimension in [mm]	16-5/8" [423]	15-13/16" [402]	8-13/16" [224]	2-7/8" [73]	5-7/8" [150]	16-7/16" [418]	19-3/4" [502]	36-9/16" [928]

Fig. 37 - Right Side View PRESTIGE Solo 80/110

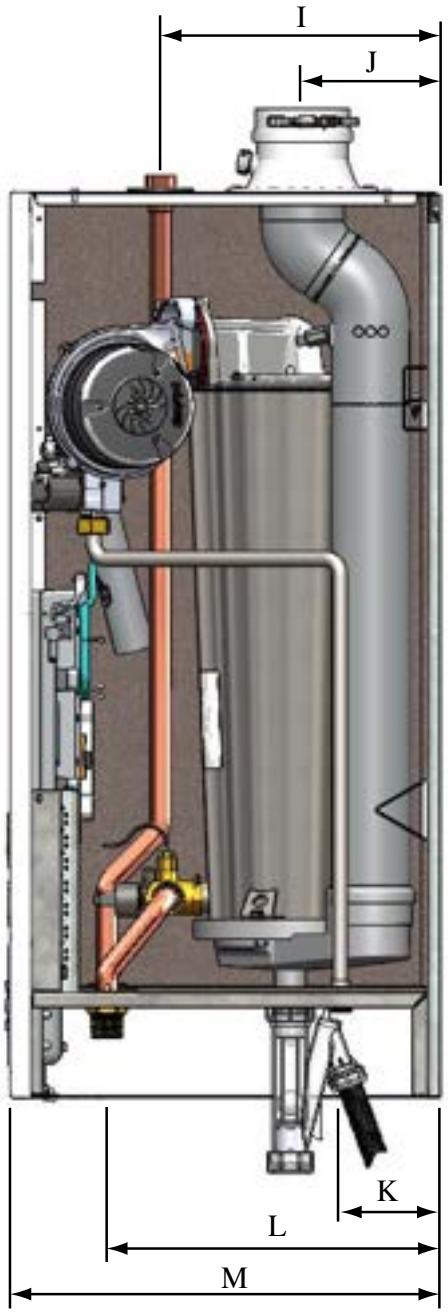

	I	J	K	L	M
Connection	3/4" NPSC Pressure Relief Valve	3" Combustion Air Inlet & 3" Vent Outlet	1/2" NPT Gas Connection	1" NPT Boiler Return & Supply	Boiler Depth
Dimension in [mm]	11-1/4" [286]	5-9/16" [141]	4" [102]	13-7/16" [341]	17-5/16" [440]

Fig. 38 - Front View PRESTIGE Solo 155/175/250

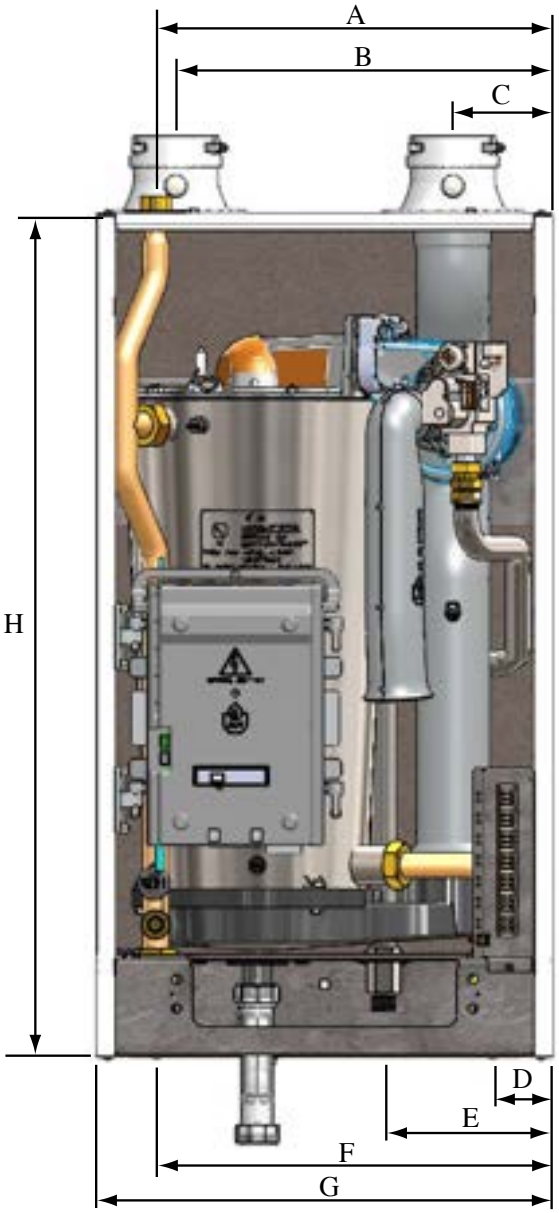

	A	B	C	D	E	F	G	H
Connection	3/4" NPSC Pressure Relief Valve	3" Combustion Air Inlet	3" Vent Outlet	1-1/4" NPT Boiler Return	3/4" NPT Gas Connection	1-1/4" NPT Boiler Supply	Boiler Width	Boiler Height
Dimension in [mm]	17" [432]	16-5/16" [415]	4-5/16" [110]	2-9/16" [65]	7-5/16" [186]	17" [432]	19-3/4" [502]	36-9/16" [928]

Fig. 39 - Right Side View PRESTIGE Solo 155/175/250

	I	J	K	L	M
Connection	3/4" NPSC Pressure Relief Valve	3" Combustion Air Inlet & 3" Vent Outlet	3/4" NPT Gas Connection	1-1/4" NPT Boiler Return & Supply	Boiler Depth
Dimension in [mm]	11-5/16" [288]	6-15/16" [175]	1-7/8" [48]	11-5/16" [288]	17-5/16" [440]

Fig. 40 - Front View PRESTIGE Solo 299/399

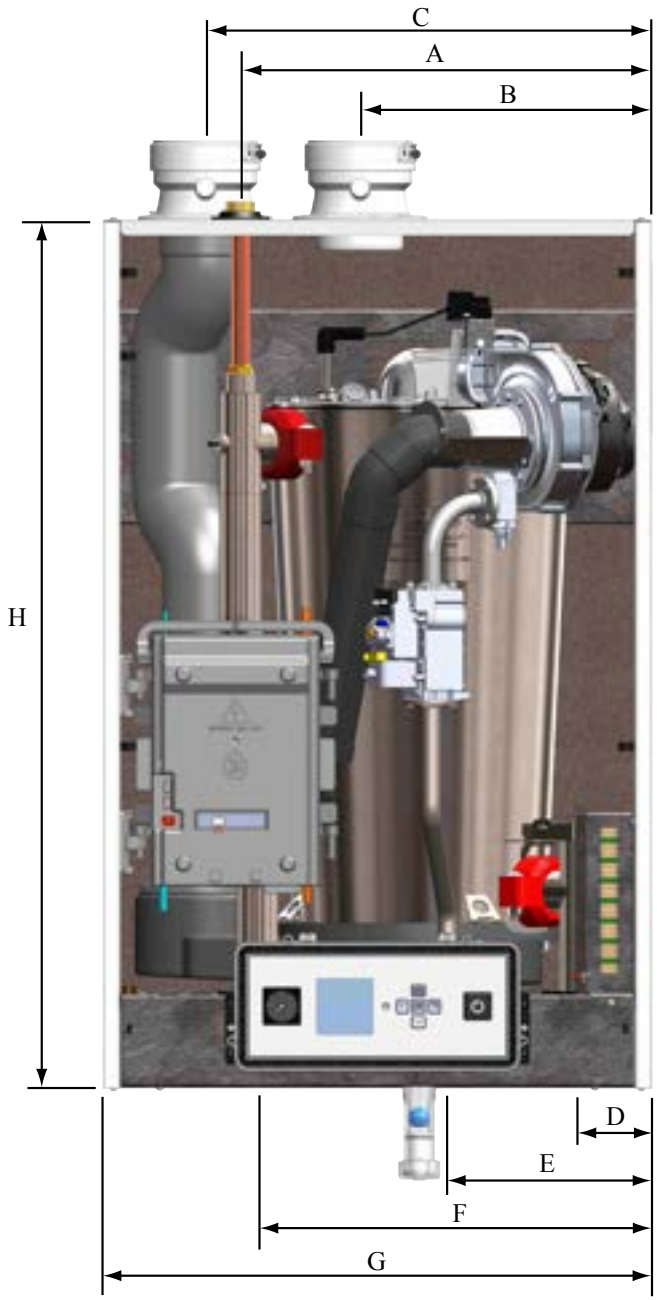

	A	B	C	D	E	F	G	H
Connection	3/4" NPSC Pressure Relief Valve	4" Combustion Air Inlet	4" Vent Outlet	1-1/2" NPT Boiler Return	1" NPT Gas Connection	1-1/2" NPT Boiler Supply	Boiler Width	Boiler Height
Dimension in [mm]	18-5/8" [473]	13-1/4" [336]	20-1/4" [514]	3-1/4" [82]	9-1/4" [236]	17-7/8" [454]	24-7/8" [632]	39-3/8" [1000]

Fig. 41 - Right Side View PRESTIGE Solo 299/399

	I	J	K	L	M
Connection	3/4" NPSC Pressure Relief Valve	4" Combustion Air Inlet & 4" Vent Outlet	1" NPT Gas Connection	1-1/2" NPT Boiler Return & Supply	Boiler Depth
Dimension in [mm]	15-1/4" [388]	5-3/8" [136]	16-1/4" [412]	14-5/8" [372]	23-5/8" [600]

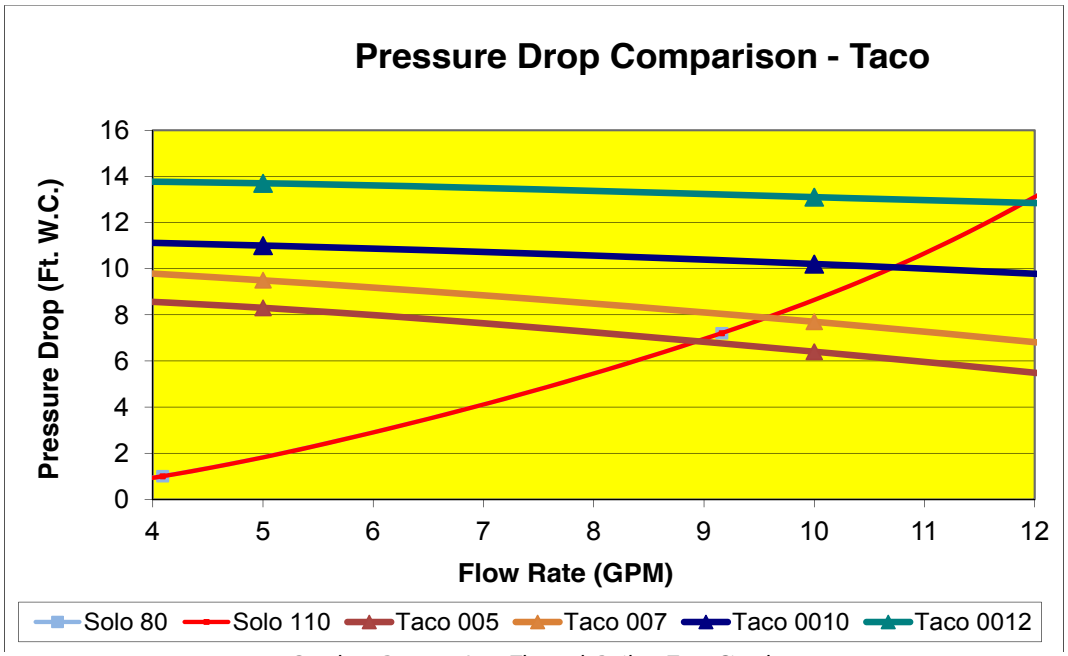

Graph 1 - Pressure Loss Through Boiler - Taco Circulators

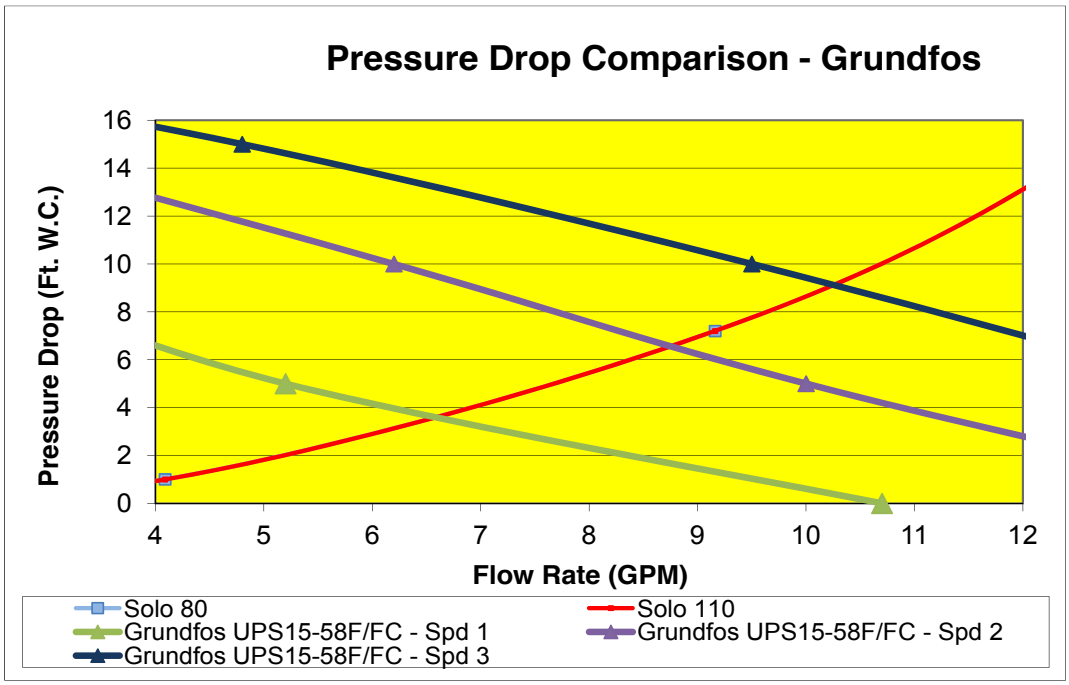

Graph 2 - Pressure Loss Through Boiler - Grundfos Circulators

Note: Minimum allowable flow rate at full input:

- 4 gpm SOLO 80
- 5 gpm SOLO 110

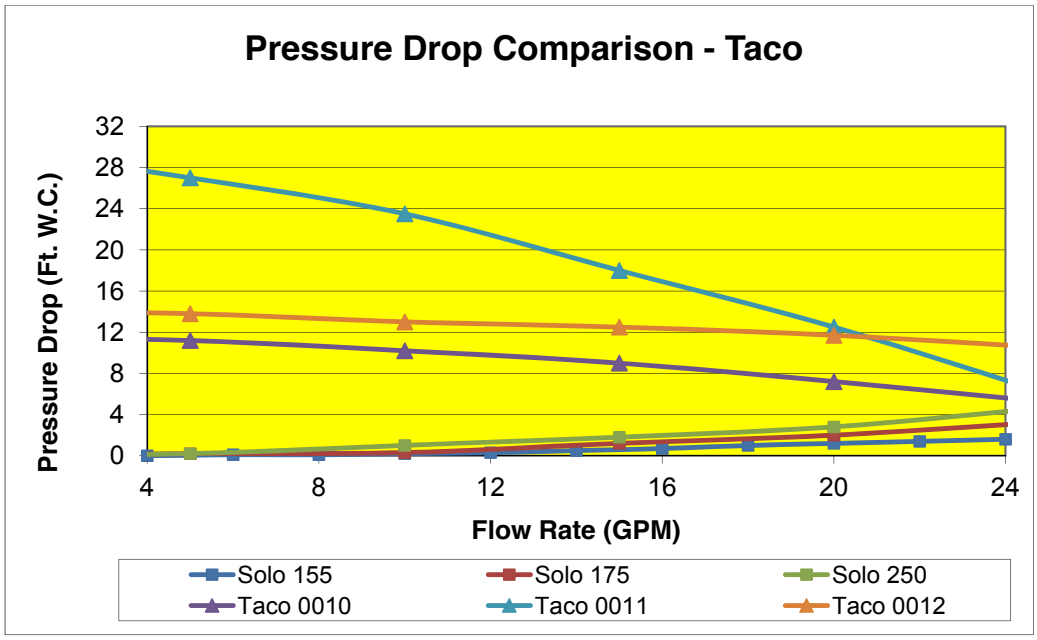

Graph 3 - Pressure Loss Through Boiler - Taco Circulators

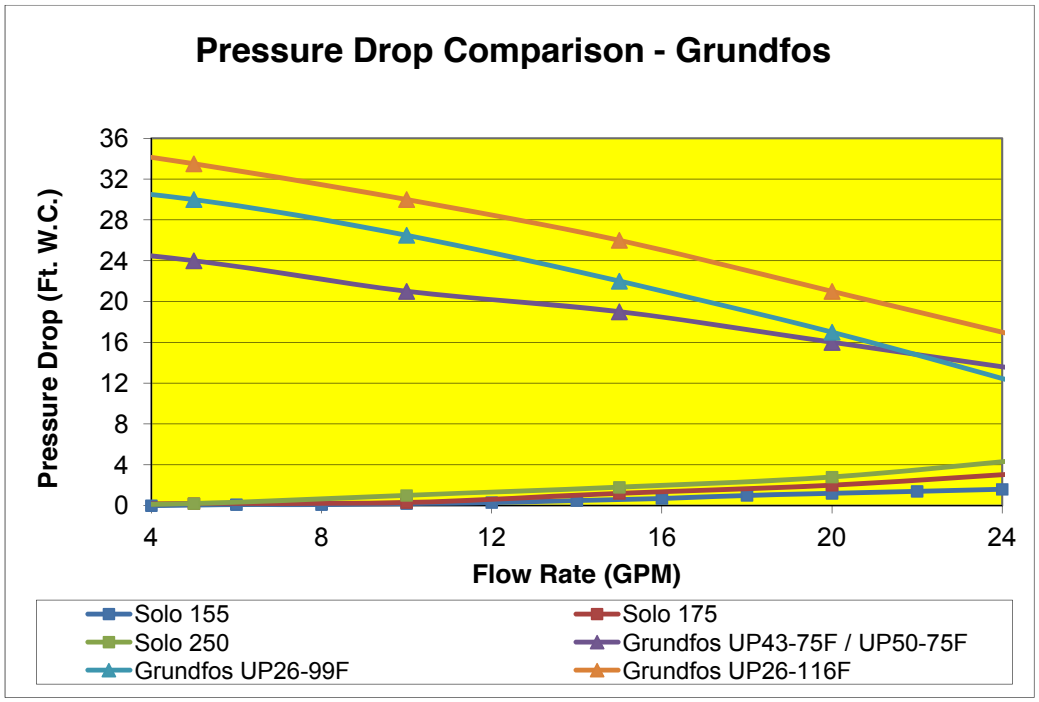

Graph 4 - Pressure Loss Through Boiler - Grundfos Circulators

Note: Minimum allowable flow rate at full input:

- 7 gpm SOLO 155
- 8 gpm SOLO 175
- 12 gpm SOLO 250

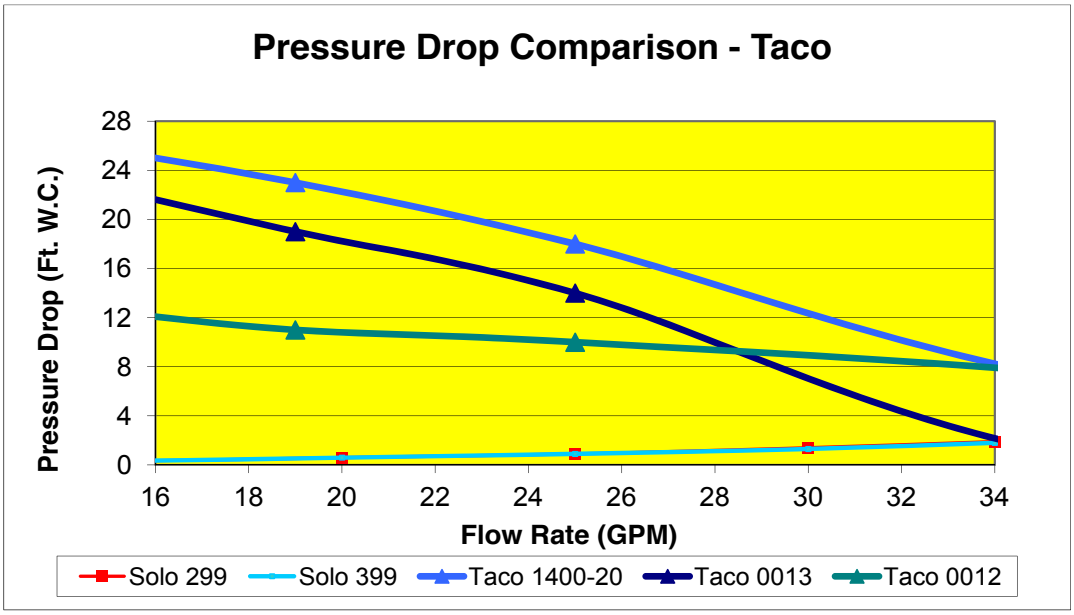

Graph 5 - Pressure Loss Through Boiler - Taco Circulators

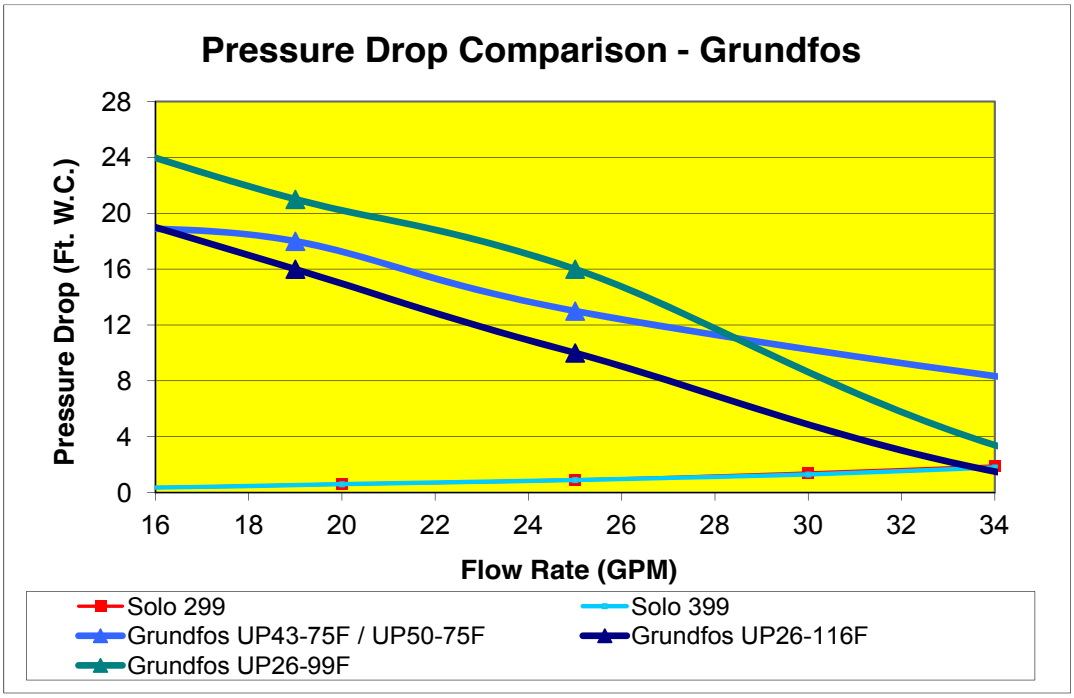

Graph 6 - Pressure Loss Through Boiler - Grundfos Circulators

Note: Minimum allowable flow rate at full input:

- 14 gpm SOLO 299
- 19 gpm SOLO 399

Additional quality water heating equipment available from Triangle Tube

Maxi-Flo Pool and Spa Heat Exchangers

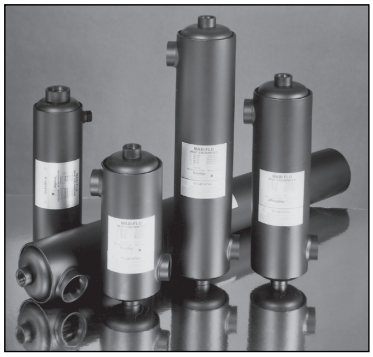

- Constructed of high quality corrosion resistant stainless steel (AISI 316) or titanium
- Specially designed built-in flow restrictor to assure maximum heat exchange
- Compact and light weight
- Available in 8 sizes to accommodate any size pool or spa

SMART316 Indirect Fired Water Heaters

- Exclusive Tank-in-Tank design
- High quality corrosion-resistant stainless steel (AISI 316) construction
- Available in 7 sizes
- Limited LIFETIME residential warranty
- 6 Year limited commercial warranty
- Self cleaning/self descaling design

TTP Brazed Plate Heat Exchangers

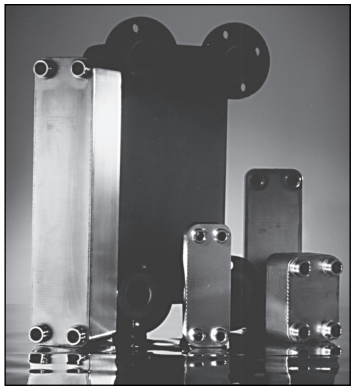

- For domestic water, snow melting, radiant floor
- Plates made of stainless steel, with 99.9 % copper brazing, ensuring a high resistance to corrosion
- Self cleaning and self descaling
- Computerized sizing available from Triangle Tube
- Available in capacities from 25,000 BTU/hr to 5,000,000 BTU/hr

Triangle Tube

Triangle Tube - 1240 Forest Parkway, Suite 100, West Deptford NJ 08066

Tel: (856) 228 8881 - Fax: (856) 228 3584 - E-mail: info@triangletube.com